University of Nottingham

Doctoral Thesis

Identification and Estimation of Quantum Linear Input-Output Systems

Author:
Matthew Levitt

Supervisors:
Mădălin Guţă
Theodore Kypraios

A thesis submitted to the University of Nottingham
for the degree of
Doctor of Philosophy

Mathematical Physics
School of Mathematical Sciences

Declaration of Authorship

I, Matthew Levitt, declare that this thesis titled, "Identification and Estimation of Quantum Linear Input-Output Systems" and the work presented in it are my own. I confirm that:

- This work was done wholly or mainly while in candidature for a research degree at this University.
- Where I have consulted the published work of others, this is always clearly attributed.
- Where I have quoted from the work of others, the source is always given. With the exception of such quotations, this thesis is entirely my own work.
- I have acknowledged all main sources of help.
- Where the thesis is based on work done by myself jointly with others, I have made clear exactly what was done by others and what I have contributed myself.

Signed:

Date:

University of Nottingham

Abstract

School of Mathematical Sciences

Doctor of Philosophy

Identification and Estimation of Quantum Linear Input-Output Systems

by Matthew Levitt

The system identification problem is to estimate dynamical parameters from the output data, obtained by performing measurements on the output fields. We investigate system identification for quantum linear systems. Our main objectives are to address the following general problems:

(1) Which parameters can be identified by measuring the output?

(2) How can we construct a system realisation from sufficient input-output data?

(3) How well can we estimate the parameters governing the dynamics?

We investigate these problems in two contrasting approaches; using time-dependent inputs (Sec. 3.7.1 or time-stationary (quantum noise) inputs (Sec. 3.7.2).

In the time-dependent approach the output fields are characterised by the *transfer function*. We show that indistinguishable minimal systems in the transfer function are related by symplectic transformations acting on the space of system modes (Ch. 6). We also present techniques enabling one to find a physical realisation of the system from the input-output data. We present realistic schemes for estimating *passive* quantum linear systems at the Heisenberg limit (Ch. 7) under energy resource constraint. 'Realistic' is our primary concern here, in the sense that there exists both experimentally feasible states and practical measurement choices that enable this heightened performance for all passive quantum linear systems. We consider both single parameter and multiple parameter estimation.

In the stationary approach the characteristic quantity is the *power spectrum*. We define the notion of global minimality for a given power spectrum, and characterise

globally minimal systems as those with fully mixed stationary state (Sec. 6.1). The power spectrum depends on the system parameters via the transfer function. Our main result here is that under global minimality the power spectrum uniquely determines the transfer function, so the system can be identified up to a symplectic transformation (see Secs. 6.5, 6.4 6.11). We also give methods for constructing a globally minimal subsystem directly from the power spectrum (see Sec. 6.3). These results hold for pure inputs, we discuss extensions to mixed inputs and the use of additional input channels; using an appropriately chosen input in the latter case ensures that the system is always globally minimal (hence identifiable).

Finally, we discuss a particular feedback control estimation problem in Chs. 8 and 9. In general, information about a parameter within a quantum linear system may be obtained at a linear rate with respect to time (in both approaches above); the so called *standard scaling*. However, we see that when the system destabilises, so that its system matrix has eigenvalues very close to the imaginary axis, the quantum Fisher information is enhanced, to quadratic (*Heisenberg*) level. We give feedback methods enabling one to destabilise the system and give adaptive procedures for realising the Heisenberg bounds.

Publications

Some of the ideas in this thesis (Chs. 5 and 6) have previously appeared in the following publications: [1, 2]. We have two articles in preparation based on the ideas in Ch. 7 (joint work with Mădălin Guţă and Naoki Yamamoto) and Ch. 9 (joint work with Mădălin Guţă). In all of the above I am the main author.

Acknowledgements

First and foremost I would like to thank my project supervisors Mădălin Guţă and Theodore Kypraios for the incredible support, patience and insight they have given during my time at the University of Nottingham. I am grateful to you for encouraging my research and for allowing me to grow as a researcher and it has been an honour to be your PhD student.

I would also like to thank my collaborators, Hendra Nurdin and Naoki Yamamoto, for providing many fruitful ideas and discussions. Also the Quantum Correlations group and the numerous visitors that we have had here at Nottingham, I would like to thank for the invaluable source of inspiration, advice and ideas.

Finally, this page would not be complete without mentioning AD for keeping me sane (and putting up with me) through the many ups and downs during the production of this work. Words cannot express my gratitude to my parents, brother and also grandparents for their love and sacrifices they've made over the years; this would not have been possible without you.

Contents

Declaration of Authorship **i**

Acknowledgements **v**

1 Introduction **1**

I Background **4**

2 Classical Linear Systems **5**

2.1 Description of CLSs 5

2.2 Controllability, Observability and Minimality 6

2.3 Time-Dependent Versus Stationary Inputs 8

2.3.1 Time-Dependent Inputs 8

2.3.2 Stationary inputs 9

2.4 Identifiability of CLSs 9

2.4.1 Time-Dependent Inputs 9

2.4.2 Stationary Inputs 9

2.5 Operations on CLSs 10

3 Quantum Linear Systems **12**

3.1 Quantum Harmonic Oscillator (QHO) and the Symplectic Group . . 12

3.2 Bosonic Fields 15

3.3 The Model: Time-Domain Representation 15

3.4 The Model: Frequency-Domain Representation 18

3.5 PQLS 19

3.6 Examples of Quantum Linear Systems 19

3.7 Time-Dependent vs Stationary Inputs 21
3.7.1 Time-Dependent Inputs 22
3.7.2 Stationary Inputs 23
3.8 Controllability, Observability, Minimality, Stability 24
3.9 Operations on QLSs 26

4 Quantum Fisher-Information and the Heisenberg Limit 27
4.1 Estimation Theory 27
4.2 Quantum Metrology and the Heisenberg Limit 29

II Results 31

5 Transfer Function Identification 32
5.1 Identifiability 33
5.2 Cascade Realisation of QLS 36
5.3 Identification Method 1: Direct Method (SISO Systems) 39
5.4 Identification Method 2: Indirect Method 43
5.5 Noisy Transfer Function Identification 46
5.5.1 Identifiability 46
5.5.2 Noise Unobservable Subspaces 52
5.6 Summary and Outlook 56

6 Power Spectrum Identification 57
6.1 Global Minimality 59
6.2 Description of the Power Spectrum as Cascaded CLSs 64
6.3 Power Spectrum Identification of SISO QLSs 67
6.4 Power Spectrum Identification of General QLSs 73
6.5 Identification Method 75
6.6 Realisation Example 77
6.7 Scattering and Squeezing 79
6.8 Passive Quantum Linear Systems 80
6.8.1 SISO 80
6.8.2 MIMO 85

6.9 Entangled Inputs 90
6.10 Thermal Inputs 92
6.11 Quantum Fisher Information 96
6.11.1 Preliminaries 96
6.11.2 QFI Calculation 97
6.11.3 Unidentifiable Directions in the Tangent Space 99
6.11.4 Equivalent Expressions for the QFI in the Stationary Approach 102
6.12 Conclusion 103

7 Quantum Enhanced Estimation of PQLSs 105
7.1 Quantum Enhanced Estimation of PQLSs; Single Parameter Estimation 107
7.1.1 Previous Results for PQLSs 107
Product States 107
Non-Gaussian States. 108
Interferometric Approach 109
States Entangled in the Frequency Domain? 110
Indefinite Photon-Number States 110
7.1.2 Estimation of a One-Dimensional Parameter in a PQLS 111
The SISO Case 111
The MIMO Case 114
7.1.3 Example: Two Atomic Ensembles 117
7.2 Estimation of Multi-Dimensional Parameters in a PQLS 120
7.2.1 General Multiple Parameter Setup 120
7.2.2 SISO PQLS 122
7.2.3 MIMO PQLS 123
7.2.4 Optimisation Problem 125
7.3 Using Entanglement Between Frequencies 125
7.3.1 The Analogous Quantum Metrology Result 126
7.3.2 $\mathcal{O}(d)$ Enhancement Using Frequency-Entangled States 127
Performance of Strategy 1 130
Performance of Strategy 2 131
Comparison of Strategies 1 and 2 132
7.3.3 Squeezing-Based Realization 133

7.4 Open Problem: Optimising the Input Over Frequency 134
7.5 Conclusion 136

8 Feedback Control Methods for Parameter Estimation in QLSs 138
8.1 Problem Formulation and Preliminary Investigation 139
8.1.1 Direct Metrology 140
8.1.2 Indirect Metrology 141
8.1.3 Toy Model 142
8.2 Feedback Method for PQLSs; Time-Dependent Approach 144
8.2.1 Adaptive Procedure 145
Isolating the Entire System 145
Isolating One Mode 145
8.2.2 Feedback Method 1 146
8.2.3 Feedback Method 2 148
SISO 148
MIMO 151
Physical Meaning of this Feedback Setup 152
8.2.4 Other Methods for Synthesising DFSs 153
8.2.5 Measurement 153
8.2.6 Discussion 155
8.2.7 Non-Linear DFS Example 156
8.2.8 Noise 159
8.3 Feedback Method for QLSs; Stationary Approach 160
8.3.1 QFI Scaling 161
8.4 Conclusion 163
8.5 Outlook 163

9 Quantum Absorbers 165
9.1 Finding the Dual System 167
9.2 Reducibility of the Power Spectrum 173
9.3 Application 1: Estimation 175
9.3.1 QFI Scaling Calculation Revisited 176
9.3.2 Signal-to-Noise Ratio (SNR) for Quadrature Measurements . . 177

The Discrete Time Measurement 177
Returning to Continuous Time 179
Interpretation of our Measurement in the Frequency Domain . 181
9.3.3 Optimal Estimation Using Adaptive Measurements 184
9.4 Further Applications and Outlook for Quantum Absorbers 186

10 Conclusion **189**

A Finding a Minimal Classical Realization **191**

B Proof of Lemma 4 **194**

C Showing Existence of a Minimal Physical System with Transfer Function (6.13) **195**

D Proof of Theorem 11 **197**
D.1 Step (1) 197
D.2 Step (2) 199
D.3 Step (3) 202

E Finding a Classical Realisation of the Power Spectrum **203**

F Proof of Theorem 14 **206**

G Supplementary Proof for Sec. 6.10 **209**

H Proof of Theorem 18 **210**

I Using Frequency-Entangled States to Improve Estimation **216**

J Adaptive Procedure for Feedback Method 2 (MIMO PQLSs) **219**

K A QFI Proof for Coherent States **221**

Bibliography **222**

Nomenclature

$M = (M_{ij})$	Matrix
$\mathbf{M} = (\mathbf{M}_{ij})$	Matrix of operators
1_n	Identity matrix of size n
$\mathbb{1}$	Identity operator
x^* or $\overline{x}$	Complex conjugate of $x \in \mathbb{C}$
$\lvert x \rvert$	Modulus of $x \in \mathbb{C}$
$\mathrm{Re}(\alpha)$	Real part of $x \in \mathbb{C}$
$\mathrm{Im}(\alpha)$	Imaginary part of $x \in \mathbb{C}$
$M^{\#} = \left(M_{ij}^*\right)$	Complex conjugate matrix
$M^T = (M_{ji})$	Transpose matrix
$M^\dagger = \left(M_{ji}^*\right)$	Adjoint matrix
$[A, B] = AB - BA$	Commutator
$\breve{X} = \left[\begin{smallmatrix} X \\ X^{\#} \end{smallmatrix}\right]$	Doubled-up matrix
$\left(\begin{smallmatrix} A & B \\ B^{\#} & A^{\#} \end{smallmatrix}\right)$	$\Delta\left(A, B\right)$
$\left(\begin{smallmatrix} 1_n & 0 \\ 0 & -1_n \end{smallmatrix}\right)$	J_n
$Z^\flat = J_m Z^\dagger J_n$ for $Z \in \mathbb{C}^{2n \times 2n}$	Symplectic adjoint
$\mathrm{Tr}(\cdot)$	Trace
$\mathrm{Det}(\cdot)$	Determinant
$\mathrm{Spec}(\cdot)$	List of eigenvalues of a matrix
$\mathrm{Diag}(x_1, ..., x_m)$	An $m \times m$ diagonal matrix with (diagonal) entries $x_1, ...x_m$
δ_{ij}	Kronecker Delta
$\delta(t)$	Dirac Delta
$\langle \cdot \rvert$ and $\lvert \cdot \rangle$	'Bra' and 'Ket' notation for a quantum state
ρ	Density matrix
$\langle \mathbf{X} \rangle$	Quantum expectation of observable $\mathbf{X}$

$\mathbb{E}[X]$	Classical expectation of random variable X
$\mathrm{Var}(\cdot)$	Variance of an observable or random variable
$\mathrm{Cov}(\cdot)$	Covariance of an observable or random variable
$\int_{-\infty}^{\infty} e^{-st} x(t)$ for $s \in \mathbb{C}$	Laplace transformation.
Semisimple matrix	A diagonalizable matrix
Monic Rational Function	A rational function $R(x) := \frac{P(x)}{Q(x)}$ where the leading coefficient of both polynomials $P(x)$ and $Q(x)$ is unity.

Chapter 1

Introduction

We stand on the brink of a quantum technological revolution, poised to deliver groundbreaking applications in computation, communication and metrology [3–5]. In order to surpass the fundamental limits set by "classical" measurement, information processing and control theory, these applications must exploit powerful quantum mechanical phenomena, such as entanglement and coherence, which have no classical analogue. However, the main difficulty is that the enhancements attributed to quantum effects are notoriously sensitive to noise [6, 7]. Therefore, the key challenge (both theoretically and experimentally) is to devise and develop quantum control methods for systems interacting with noisy environments. This has motivated the development of quantum filtering theory [8–11], quantum feedback control [5, 11–21] and network theory [22–25], which build on the existing classical stochastic control theory.

In particular, there has been a rapid growth in the study of quantum linear systems (QLSs). QLSs are a class of models used in quantum optics, opto-mechanical systems, electrodynamical systems, cavity QED systems and elsewhere [19, 26–31]. They have many applications, such as quantum memories, entanglement generation, quantum information processing and quantum control [7–9, 32–37]. Broadly speaking, a QLS consists of a continuous variable quantum system (e.g an electromagnetic field in an optical cavity) weakly coupled with a Bosonic environment (e.g. external laser fields). They are analogous to classical electrical networks; classical circuits are built from elementary elements such as resistors, capacitors, inducers, etc, whereas QLSs are quantum circuits built from beam-splitters, optical, cavities and squeezers. QLSs are input-output models, where one prepares an input in the field and then

infers system parameters indirectly through quantum measurements in the field.

System identification theory [38–42] lies at the boundary of control theory and statistical inference, and deals with the estimation of unknown dynamical parameters, such as the system hamiltonian or coupling constants, from the input-output data. The identification of linear systems is by now a well developed and mature topic in classical systems theory [38–40, 44–50], but has not been fully explored in the quantum domain [5]. Here we will strive towards this.

We distinguish two contrasting approaches to the identification of QLSs, which we illustrate in Fig. 3.3. In the first approach, one probes the system with a known *time-dependent* input signal (e.g., coherent state), then uses the output measurement data to compute an estimator of the unknown dynamical parameter. The characteristic quantity here is the *transfer function* and as such QLSs with the same transfer function are called *transfer function equivalent* (TFE). We investigate system identification for the time-dependent approach in Ch. 5. In the second approach the input fields are prepared in a stationary (in time) pure Gaussian state with independent increments (squeezed vacuum noise) and the characteristic quantity is the power spectrum. We explore this approach in Ch. 6.

Following the results in Chs. 5 and 6 one will understand what parameters can be identified in a QLS and how to identify them. The next natural question following this is how well such parameters can be identified? This question is the main focus of Chs. 7 and 8. The setup is similar to the standard metrology setup (which is also reviewed in Ch. 4), however the added difficulty in the QLS setup arises from working in continuous time and therefore requires a different analysis of behaviour [51]. In Sec. 7.1 we provide a realistic scheme to identify a single unknown parameter of a *passive* QLS at the Heisenberg limit with respect to an energy constraint. 'Realistic' is our primary concern here, in the sense that there exists both experimentally feasible states and practical measurement choices. Our method uses a generalisation of the seminal interferometric method proposed by Caves in 1981 [52], which places squeezed and coherent states in the interferometer arms. Our method is genuinely quantum system identification using entanglement, which is a new topic in systems and control theory. Note that this strategy is currently being implemented in the most advanced interferometers designed to detect *gravitational waves* [53, 54]. In

Ch. 8 we switch focus, so that time is our main resource constraint, and investigate in detail the phenomenon that when the system destabilises, so that the system is quasi-decoherence free, metrological information from the system is enhanced and the *quantum fisher information* becomes quadratic (rather than linear) in the observation time. This is particularly surprising considering that information about the system is extracted indirectly via the field and such destabilisation will make the system-field coupling smaller.

Finally, in Ch. 9 we consider a particular *reservoir engineering* problem. Reservoir engineering is a hot topic at the moment and is concerned with designing the dissipative dynamics of a system with the environment to drive the system into a desired pure stationary state. It has various applications in laser cooling and optical pumping [26, 55–58]. Given a QLS is it possible to design a second QLS so that the combined system has a pure stationary state and (by results in Ch. 6) the output of the first system is negated by the second. This provides a natural purification for the stationary state and we see later its possible applications.

In Part I we review the necessary background material required for this thesis In particular, in Chs. 2 and 3 we review in detail the important aspects of classical and quantum linear systems, respectively, and Ch. 4 surveys the necessary aspects of quantum estimation theory. Part II comprises the main results outlined above.

Part I

Background

Chapter 2

Classical Linear Systems

Classical linear systems (CLSs) are dynamical models describing a range of real world phenomena. They have many applications, from *automatic control systems* and *communication*, to *aeronautics* and *engineering* [49, 59–61]. Most recently the applications of linear systems have extended to quantum mechanics, which subsequently led to the birth of *quantum linear systems theory* [13];. Many CLS theory results transfer over to quantum linear systems theory directly, therefore it is worthwhile for us to review CLSs in detail first.

CLSs are examples of input-output or 'black-box' models. Typically, one can access the system indirectly by preparing a time-dependent input signal, which acts as a probe to the system. After the coupling, the parameters of the system are imprinted on the output signal. From the observations, the task is to estimate parameters within the system. A huge body of theory has been developed to treat various aspects of this problem, including *system identification, realization theory* and *statistical estimation theory* [45, 48, 49, 62].

2.1 Description of CLSs

CLSs are described by the following pair of differential equations [49]

$$dx(t) = Ax(t)dt + Bu(t)dt \tag{2.1}$$

$$dy(t) = Cx(t)dt + Du(t)dt \tag{2.2}$$

where $x(t) \in \mathbb{C}^n$ is called the *system state*, $u(t) \in \mathbb{C}^m$ is an *input signal* and $y(t) \in \mathbb{C}^p$ is an *output signal*. The matrices A, B, C, D are appropriately dimensioned complex matrices[1]. A CLS with one input channel ($m = 1$) and one output channel ($p = 1$) is called SISO (single input and single output), otherwise it is called MIMO (multiple input and multiple output). The input to the system can be deterministic or stochastic, resulting in a set of differential or stochastic differential equations respectively.

Now, Eqs. (2.1) (2.2) can be solved directly [38, 49]; we give the solution for $x(t)$ here:

$$x(t) = e^{A(t-t_0)}x(t_0) + \int_{t_0}^{t} e^{A(t-\tau)}Bu(\tau)d\tau \tag{2.3}$$

where t_0 is the initial time. From Eq. (2.3), if any of the eigenvalues of A are in right half plane ($\mathrm{Re}(\lambda(A)) \geq 0$) then $x(t)$ will be dominated by the first term and will grow without bound in the long time limit. Therefore, from now we will only be interested in *stable* CLSs (see Def. 1).

Definition 1. *A CLS (A, B, C, D) is said to be (Hurwitz) stable if all eigenvalues of A lie in the open left half plane.*

2.2 Controllability, Observability and Minimality

Apart from the input (and the initial state of the system) the dynamics is completely determined by the quadruple (A, B, C, D) [5]. The following two concepts, defined in terms of these matrices, are very important in linear systems theory [49]:

Definition 2. *A CLS (A, B, C, D) or the pair (A, B) is controllable if, for any initial initial state x_0, final state x_1 and times $t_0 < t_1$ there exists a (piecewise continuous) input $u(\cdot)$ such that $x(t_0) = x_0$ and $x(t_1) = x_1$. Otherwise the pair (A, B) is uncontrollable.*

Definition 3. *A CLS (A, B, C, D) or the pair (C, A) is observable if, for any times $t_0 < t_1$ the initial state $x(t_0) = x_0$ can be determined from the past history of the*

[1] Usually everything here is real valued, however from a quantum point of view later it is more natural to work with complex matrices and signals.

input $u(t)$ and the output $y(t)$ in the time interval $[t_0, t_1]$. Otherwise the pair (C, A) is unobservable.

We will see precisely why these definitions are so important shortly. But first observe that we can take the Laplace transformation (see Nomenclature) of (2.1) and (2.2) to obtain the following input-output map[2]:

$$Y(s) = G(s)U(s), \tag{2.4}$$

where $U(s)$ and $Y(s)$ are the Laplace transforms of $u(s)$ and $y(s)$ and the *transfer function* $G(s)$ is given by:

$$G(s) = C\,(sI - A)^{-1}\,B + D.$$

The most an experimenter can hope to obtain from measurements of the output is the transfer function. However, not only is it possible that two CLSs can have the same transfer function, such systems may also have differing dimensions (i.e different number of modes). In seeking the simplest model of the input-output behaviour we make the following definition.

Definition 4. *A state space realisation (A, B, C, D) of the transfer function $G(s)$ is minimal if there is no other state space with smaller dimension.*

Now, the importance of the controllability and observability can be seen in the following fact [49]: if a system (A, B, C, D) is **not** observable or controllable then there exists a lower dimensional system with the same transfer function as the original one. Furthermore, a minimal system may be obtained from the former by using a technique called the *Kalman decomposition* [49]. Therefore, in this sense describing the transfer system by a non-minimal system would be superfluous.

The following system theoretic results linking the concepts will be very useful in the following; they are stated without proof (see for example [49]).

Theorem 1. *The following are equivalent:*

(1) (A, B) is controllable

[2] under the assumption of stability

(2) The controllability matrix

$$\mathcal{C} = \begin{bmatrix} B & AB & \dots & A^{n-1}B \end{bmatrix} \tag{2.5}$$

has full column rank.

(3) For any left-eigenvector, x, of A with corresponding eigenvalue λ, i.e $x^\dagger A = x^\dagger \lambda$, then $x^\dagger B \neq 0$.

(4) $(B^\dagger, A^\dagger)$ is observable.

Theorem 2. *The following are equivalent:*

(1) (C, A) is observable

(2) The observability matrix

$$\mathcal{O} = \begin{bmatrix} C \\ CA \\ \vdots \\ CA^{n-1} \end{bmatrix} \tag{2.6}$$

has full row rank.

(3) For any right-eigenvector, y, of A with corresponding eigenvalue λ, i.e $Ay = \lambda y$, then $By \neq 0$.

(4) $(A^\dagger, C^\dagger)$ is controllable.

2.3 Time-Dependent Versus Stationary Inputs

We now distinguish two parallel setups within the CLS theory, which are determined by the choice of input. That is, we discuss the use of both time-dependent and stationary inputs in this subsection.

2.3.1 Time-Dependent Inputs

In the time-dependent approach, one probes the system with a known time-dependent pulse $u(t)$. In the Laplace-domain the input-output map is therefore is entirely captured by the transfer function, $G(s)$, and hence the most that one can identify in this approach is the transfer function.

2.3.2 Stationary inputs

In the stationary approach we assume that the system is driven by stationary white noise $u(t)$ characterised by covariance $\mathbb{E}\left[u(t)u^\dagger(\tau)\right] = 1_m\delta(t-\tau)$. From (2.2) (and working in the Laplace-domain) the most information about the system in the output is given by the *power spectral density* (or power spectrum) [62]:

$$\Psi(s) := \mathbb{E}\left[Y(s)Y(-s^*)^\dagger\right] = G(s)G(-s^*)^\dagger.$$

2.4 Identifiability of CLSs

As hinted earlier, the following question is very important question in linear systems theory [38, 49]: which dynamical parameters of a CLS can be identified by observing the output?

2.4.1 Time-Dependent Inputs

Since the transfer function may be recovered from the input-output map, the identifiability question in the time-dependent approach reduces to finding the equivalence classes of (minimal) systems with the same transfer function. This *system identification problem* has been addressed in the literature [45–47] and we state it here for convenience.

Theorem 3. *Let (A, B, C, D) and (A', B', C', D') be two minimal CLSs. Then they have the same transfer function if and only if there exists a similarity transformation T such that*

$$A' = TAT^{-1}, \quad B' = TB, \quad C' = CT^{-1}, \quad D = D'. \tag{2.7}$$

2.4.2 Stationary Inputs

In the stationary input approach the power spectrum can be computed from the output correlations. Understanding which parameters can be identified from the CLS reduces to finding all CLSs with the same power spectrum. Observe that

the power spectrum depends on the system parameters via the transfer function, therefore it cannot be possible to identify more than the transfer function. The problem of finding the transfer function from the power spectrum is of the type: 'for a square rational matrix $R(s)$, where $s \in \mathbb{C}$, find rational matrix $W(s)$ such that

$$R(s) = W(s)W(-s^*)^\dagger$$

for all $s \in \mathbb{C}$'. This type of problem is called the *spectral factorisation problem* [47, 48]. There are known algorithms to do this [48, 50]. From the latter, one then finds a system realisation (i.e. matrices governing the system dynamics) for the given transfer function [38]. The problem is that the map from power spectrum to transfer functions is non-unique, and each factorisation could lead to (minimal) system realisations of differing dimension. For this reason, the concept of *global minimality* was introduced in [45] to select the transfer function with smallest system dimension.

Definition 5. *A CLS (A, B, C, D) is globally minimal if there exists no lower dimensional system with the same power spectrum, $\Psi(s)$.*

This raises the following question: is global minimality sufficient to **uniquely** identify the transfer function from the power spectrum? The answer is in general negative[3], as discussed in [44, 47] (see also Lemma 2 and Corollary 1 in [62]).

2.5 Operations on CLSs

We conclude this section by discussing two methods of connecting CLSs. These are analogous to the notions of components connected in parallel or in series in electrical circuits.

The *concatenation* connection [49], which consists of lying two systems (A_1, B_1, C_1, D_1) and (A_2, B_2, C_2, D_2) side by side (cf. Fig. 2.1), has system matrices

$$\left(\begin{pmatrix} A_1 & 0 \\ 0 & A_2 \end{pmatrix}, \begin{pmatrix} B_1 & 0 \\ 0 & B_2 \end{pmatrix}, \begin{pmatrix} C_1 & 0 \\ 0 & C_2 \end{pmatrix}, \begin{pmatrix} D_1 & 0 \\ 0 & D_2 \end{pmatrix} \right). \tag{2.8}$$

[3]However, under the assumption that the transfer function be *outer* the construction of the transfer function from the power spectrum is unique (see [62]).

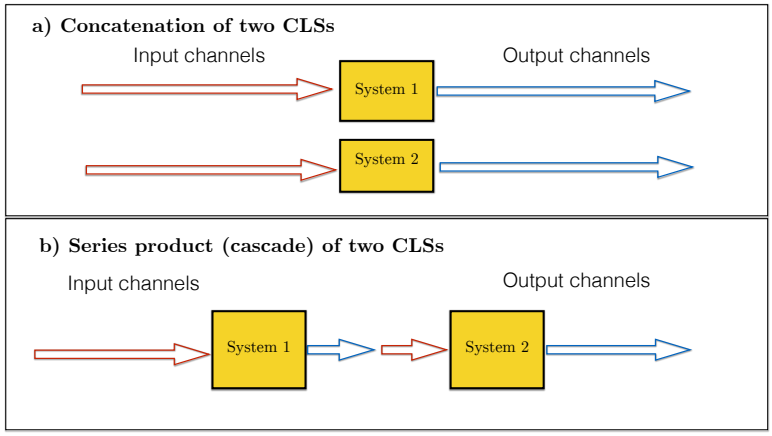

FIGURE 2.1: Illustration on a) concatenation connection and b) series product connection.

The *series product* connection [49], which consists of connecting two systems in series with the output of the (A_1, B_1, C_1, D_1) as the input of the (A_2, B_2, C_2, D_2) (cf. Fig. 2.1), has system matrices

$$\left(\begin{pmatrix} A_1 & 0 \\ B_2 C_1 & A_2 \end{pmatrix}, \begin{pmatrix} B_1 \\ B_2 D_1 \end{pmatrix}, \begin{pmatrix} D_2 C_1 & C_2 \end{pmatrix}, D_2 D_1 \right). \tag{2.9}$$

Chapter 3

Quantum Linear Systems

Quantum linear systems (QLSs) are composed of a continuous variables *system* coupled to a series of quantum stochastic input *fields* consisting of non-commuting noise processes [5, 13]. Following the input-system interaction, the input is transformed into an output, which can be measured to produce a classical stochastic process (see Ch. 2) [5]. Their uses extend to quantum optics, opto-mechanical systems, electrodynamical systems, cavity QED systems and elsewhere and have a huge array of applications [8, 19, 26, 28–31, 36, 37]. The framework required to describe these is the celebrated *quantum stochastic calculus* [63].

In this section we review the QLS theory; firstly discussing in detail the *system* and *field* constituents. We then highlight some results of relevance for this thesis. We refer the reader to [29] and [64] for a more detailed discussion on the input-output formalism, and to the review papers [13, 25, 63, 65] for the theory of QLSs.

3.1 Quantum Harmonic Oscillator (QHO) and the Symplectic Group

Consider a collection of n QHOs, which are described by a column vector of annihilation operators, $\mathbf{a} := [\mathbf{a}_1, \mathbf{a}_2, \ldots, \mathbf{a}_n]^T$. Together with their respective creation operators $\mathbf{a}^\# := [\mathbf{a}_1^\#, \mathbf{a}_2^\#, \ldots, \mathbf{a}_n^\#]^T$ they satisfy the canonical commutation relations (CCR) $\left[\mathbf{a}_i, \mathbf{a}_j^*\right] = \delta_{ij}\mathbb{1}$. Alternatively, we may write these in doubled-up notation as

$$\left[\breve{\mathbf{a}}_i, \breve{\mathbf{a}}_k^\#\right] = J_{ik}.$$

We denote by $\mathcal{H} := L^2(\mathbb{R}^n)$ the Hilbert space of this system carrying the standard representation of the n modes.

Definition 6. *A matrix $S \in \mathbb{C}^{2n\times 2n}$ is said to be $\flat$-unitary if it is invertible and satisfies*

$$S^\flat S = SS^\flat = 1_{2n}.$$

If additionally, S is of the form $S = \Delta(S_-, S_+)$ for some $S_-, S_+ \in \mathbb{C}^{m\times m}$ then we call it symplectic. Such matrices form a group called the symplectic group [11].

The *symplectic transformation*

$$\breve{\mathbf{a}} \mapsto S\breve{\mathbf{a}} \tag{3.1}$$

for symplectic matrix S preserves the CCR and is a mapping from one QHO system to another. In addition such a transformation may be unitarily implemented [11]; that is, by Shale's Theorem [66] there exists a unitary operator $\mathbf{U}$ such that

$$S\breve{\mathbf{a}} = \mathbf{U}^\dagger \breve{\mathbf{a}} \mathbf{U}.$$

From the familiar quantum mechanical point of view, there is a Hamiltonian $\mathbf{H}$ generating (3.1). That is, $\mathbf{U} = e^{-i\mathbf{H}}$ where

$$\mathbf{H} = \mathbf{a}^\dagger \Omega_- \mathbf{a} + \frac{1}{2}\mathbf{a}^T \Omega_+^\dagger \mathbf{a} + \frac{1}{2}\mathbf{a}^\dagger \Omega_+ \mathbf{a}^\# \tag{3.2}$$

for $n \times n$ matrices $\Omega_- = \Omega_-^\dagger$, $\Omega_+ = \Omega_+^T$ [67].

A state on $\mathcal{H}$ is said to be *Gaussian* if

$$\left\langle e^{i\breve{u}^\dagger \breve{\mathbf{a}}} \right\rangle = e^{-\frac{1}{2}\breve{u}^\dagger V \breve{u} + i\breve{u}^\dagger \breve{\alpha}}, \tag{3.3}$$

where $V \geq 0$. The Gaussian state is characterised by the mean $\breve{\alpha} = \langle \breve{\mathbf{a}} \rangle$ and the covariance matrix

$$V := \left\langle \breve{\mathbf{a}}\breve{\mathbf{a}}^\dagger \right\rangle = \begin{pmatrix} 1+N^T & M \\ M^\dagger & N \end{pmatrix}$$

where $N = N^\dagger$ and $M = M^T$. Now, we can also interpret (3.1) as a change of basis, since in the co-ordinates $\breve{\mathbf{a}}' := S\breve{\mathbf{a}}$ the state will be Gaussian with mean and

covariance $S\breve{\alpha}$ and $SVS^\dagger$ respectively. A *coherent state* with amplitude α corresponds to the case $N = M = 0$ (note that the vacuum is a coherent state with amplitude $\alpha = 0$). Assuming that $\alpha = 0$ for simplicity, then the state's purity can be characterised in terms of the symplectic eigenvalues of V. That is, there exists a symplectic matrix, S, such that the modes $\breve{\mathbf{a}}' = S\breve{\mathbf{a}}$ are independent of each other and each of them is in a vacuum or thermal state i.e. $V_i = \left\langle \breve{\mathbf{a}}_i' \breve{\mathbf{a}}_i'^\dagger \right\rangle = \left(\begin{smallmatrix} n_i+1 & 0 \\ 0 & n_i \end{smallmatrix}\right)$, where n_i is the mean photon number. We call $\breve{\mathbf{a}}'$ a canonical basis and the elements of the ordered sequence $n_1 \leq ... \leq n_k$ the *symplectic eigenvalues* of V. The latter give information about the state's purity: if all $n_i = 0$ the state is pure, if all $n_i > 0$ the state is fully mixed. This result is known as *Williamson's Theorem* [67–69]. In particular, a pure stationary state may be viewed in a different basis as vacuum by performing the symplectic transformation [67]

$$S = \Delta\left((N^T + 1)^{1/2}, M\left(N^\dagger + 1\right)^{-1/2}\right). \tag{3.4}$$

More generally, we can separate the pure and mixed modes and write $\mathbf{a}' = \left(\mathbf{a}_p^T, \mathbf{a}_m^T\right)^T$ (cf symplectic decomposition [70]). For more details on Gaussian states see [67, 68]. A further useful result for this thesis is the following, which relates to bipartite entanglement of Gaussian states [71, Theorem 1].

Theorem 4. *Consider a bipartition of a (zero mean) pure Gaussian state with n modes, so that A has n_1 modes (and B has $n - n_1$ modes). Then there exists local symplectic transformations at each site A and B so that*

$$|\psi\rangle_{A,B} = |\psi\rangle_{\tilde{A}_1,\tilde{B}_1} \otimes ... \otimes |\psi\rangle_{\tilde{A}_s,\tilde{B}_s} \otimes |0\rangle_{\tilde{A}_F} \otimes |0\rangle_{\tilde{B}_F}, \tag{3.5}$$

for some $s \leq \min(n_1, n - n_1)$, where $\{\tilde{A}_1, ...\tilde{A}_{n_1}\}$ and $\{\tilde{B}_1, ...\tilde{B}_{n-n_1}\}$ are the new transformed sets of modes. Here $|\psi\rangle_{\tilde{A}_i,\tilde{B}_i}$ are two-mode squeezed states [72] characterised by covariance matrix $V(N_i, M_i)$ with

$$N_i = \left(\begin{smallmatrix} n_i & 0 \\ 0 & n_i \end{smallmatrix}\right) \quad \text{and} \quad M_i = \left(\begin{smallmatrix} 0 & m_i \\ m_i & 0 \end{smallmatrix}\right)$$

with $n_i, m_i \in \mathbb{R}$ and $n_i(n_i + 1) = m_i^2$ (purity condition). The states $|0\rangle_{\tilde{A}_F}$ and $|0\rangle_{\tilde{B}_F}$ are vacuum states on the remaining modes in $\tilde{A}_i$ and $\tilde{B}_i$ respectively.

This result says that any bipartite division of modes in a pure Gaussian state can always be expressed as a product state involving either two-mode squeezed states or single mode squeezed states at each site. The proof is a consequence of the *Schmidt decomposition* [3]. Essentially, since the reduced state (with respect to the bipartition) of the original pure Gaussian state is also Gaussian, then one may apply Williamson's Theorem on each site. Careful comparison of this with the result of the Schmidt decomposition gives the result.

Remark 1. *Observe that the symplectic eigenvalues of the reduced states for observers $\tilde{A}$ and $\tilde{B}$ are identical. Furthermore, the reduced states on modes $\tilde{A}_i$ and $\tilde{B}_i$ are the same and are given by $V_{\tilde{A}_i} = V_{\tilde{B}_i} = \left(\begin{smallmatrix} n_i+1 & 0 \\ 0 & n_1 \end{smallmatrix}\right)$. Moreover the character of entanglement can be understood mode-wise because each mode on one side is entangled with only one on the other side.*

3.2 Bosonic Fields

A bosonic environment with m channels is described by fundamental variables (fields) $\mathbf{B}(t) := [\mathbf{B}_1(t), \mathbf{B}_2(t), \ldots, \mathbf{B}_m(t)]^T$, where $t \in \mathbb{R}$ represents time. The fields satisfy the CCR

$$\left[\mathbf{B}_i(t), \mathbf{B}_j^*(s)\right] = \min\{t, s\}\delta_{ij}\mathbb{1}. \tag{3.6}$$

Equivalently, this can be written as $\left[\breve{\mathbf{b}}_i(t), \breve{\mathbf{b}}_k^*(s)\right] = \delta(t-s)J_{ik}\mathbb{1}$, where $\mathbf{b}_i(t)$ are the infinitesimal (white noise) annihilation operators formally defined as $\mathbf{b}_i(t) := d\mathbf{B}_i(t)/dt$ [13]. The operators can be defined in a standard fashion on the Fock space $\mathcal{F} = \mathcal{F}(L^2(\mathbb{R}) \otimes \mathbb{C}^m)$ [10]. At each instance of time the modes $b_i(t)$ may be interpreted as an m-mode QHO. For more details on Bosonic fields and quantum stochastic processes see [10, 63].

3.3 The Model: Time-Domain Representation

A quantum linear system (QLS) is defined as a continuous variable (cv) system (Sec. 3.1), called the *system*, coupled to a Bosonic environment (Sec. 3.2), called the

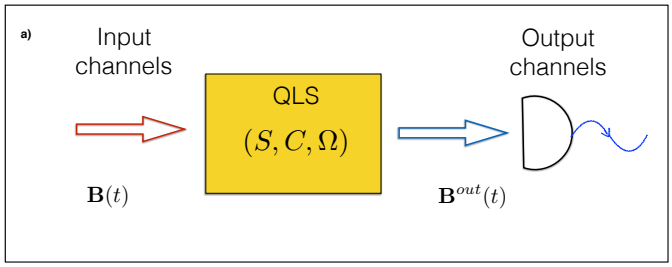

FIGURE 3.1: System identification problem: find parameters (S, C, Ω) of a QLS by measuring output.

field(s). QLSs are input-output models (see Fig. 3.1), in which one prepares an input in the field and then infers system parameters indirectly from measurements of the output.

The dynamics of a QLS is determined by the system's Hamiltonian (3.2) and the coupling operator

$$\mathbf{L} = C_{-}\mathbf{a} + C_{+}\mathbf{a}^{\#}, \tag{3.7}$$

where C_{-} and C_{+} are $m \times n$ matrices. In the Markov approximation, the joint unitary evolution of "system $\otimes$ field" is described (in the interaction picture) by the unitary

$$\mathbf{U}(t) = \overleftarrow{\exp}\left[-i\int_0^t (\mathbf{H} + \mathbf{H}_{int}(s))\, ds\right]$$

on the joint space $\mathcal{H} \otimes \mathcal{F}$, where $\mathbf{H}_{int} := i\left[\mathbf{b}^{\dagger}(t)\mathbf{L} - \mathbf{L}^{\dagger}\mathbf{b}(t)\right]$ is the *interaction Hamiltonian*. Notice that the total Hamiltonian $\mathbf{H} + \mathbf{H}_{int}(t)$ is quadratic in the canonical variables. The unitary $\mathbf{U}(t)$ is the (unique) solution of the quantum stochastic differential equation (QSDE) [7, 9, 10, 29, 63, 65]

$$\begin{aligned} d\mathbf{U}(t) &:= \mathbf{U}(t+dt) - \mathbf{U}(t) \\ &= \left(-i\mathbf{H}dt + (\mathbf{S} - \mathbb{1}_m)d\mathbf{\Lambda}(t) + d\mathbf{A}^{\dagger}(t)\mathbf{L} - \mathbf{L}^{\dagger}d\mathbf{A}(t) - \frac{1}{2}\mathbf{L}^{\dagger}\mathbf{L}dt\right)\mathbf{U}(t), \end{aligned} \tag{3.8}$$

with initial condition $\mathbf{U}(0) = \mathbf{I}$. Here $\mathbf{S} = S\mathbf{1}_m$ describes the scattering between the fields; $d\mathbf{A}_i(t), d\mathbf{A}_i^*(t), d\mathbf{\Lambda}_{ij}(t)$ are increments of fundamental quantum stochastic processes describing the creation, annihilation and scattering between the input channels. In particular, $\mathbf{\Lambda}(t)$ is an $m \times m$ matrix whose elements $\mathbf{\Lambda}_{ij}(t)$ are the

second quantisation operators $d\Gamma(P_{[0,t]} \otimes |j\rangle\langle i|)$, where $P_{[0,t]}$ is the projection onto wave functions in $L^2(\mathbb{R})$ with support in $(0,t)$. These operators represent scattering between the input channels and are formally given by $\mathbf{\Lambda}_{ij}(t) := \int_0^t \mathbf{b}_i^*(s)\mathbf{b}_j(s)ds$.

Now let $\mathbf{a}(t)$ and $\mathbf{B}^{out}(t)$ be the Heisenberg evolved system and output variables

$$\mathbf{a}(t) := \mathbf{U}(t)^\dagger \mathbf{a}\mathbf{U}(t), \quad \mathbf{B}^{out}(t) := \mathbf{U}(t)^\dagger \mathbf{B}(t)\mathbf{U}(t). \tag{3.9}$$

A consequence of the quadratic Hamiltonian is that these variables satisfy linear (doubled-up) QSDEs (see for example [10, 11, 63]):

$$d\breve{\mathbf{a}}(t) = A\breve{\mathbf{a}}(t)dt - C^\flat \Delta(S,0)d\breve{\mathbf{B}}(t), \tag{3.10}$$

$$d\breve{\mathbf{B}}^{out}(t) = C\breve{\mathbf{a}}(t)dt + \Delta(S,0)d\breve{\mathbf{B}}(t), \tag{3.11}$$

where $C := \Delta\left(C_-, C_+\right)$ and $A := \Delta\left(A_-, A_+\right) = -\frac{1}{2}C^\flat C - iJ_n\Omega$ with $\Omega = \Delta\left(\Omega_-, \Omega_+\right)$ and

$$A_\mp := -\frac{1}{2}\left(C_-^\dagger C_\mp - C_+^T C_\pm^\#\right) - i\Omega_\mp.$$

These are formally equivalent to the *Langevin* equations

$$\breve{\dot{\mathbf{a}}}(t) = A\breve{\mathbf{a}}(t) - C^\flat \Delta(S,0)\breve{\mathbf{b}}(t), \tag{3.12}$$

$$\breve{\mathbf{b}}^{out}(t) = C\breve{\mathbf{a}}(t) + \Delta(S,0)\breve{\mathbf{b}}(t), \tag{3.13}$$

with $\breve{\mathbf{b}}^{out}(t) := d\breve{\mathbf{B}}(t)/dt$. These equations may be solved; we give the solution to Eq. (3.12):

$$\breve{\mathbf{a}}(t) = e^{At}\breve{\mathbf{a}}(0) + e^{At}\left(\int_0^t e^{-As}(-C^\flat)d\breve{\mathbf{B}}(s)\right). \tag{3.14}$$

More generally one may allow for static squeezing operations in the field in addition to the scattering processes. This is achieved by extending the unitary scattering matrices $S = \Delta(S,0)$ to the symplectic group. We therefore denote by S the squeezing and/or scattering in the field.

To be explicit, an arbitrary QLS is completely characterised by the parameters (S, C, Ω). Synonymously we also use the notation (S, C, A) here to characterise the QLS. However one should be aware that not all choices of A are physically realisable as QLSs [14]. In fact, a general (S, C, A) satisfying the equations (3.12) and (3.13)

realises a QLS if and only if [34, 73]

$$A + A^\flat + C^b C = 0. \tag{3.15}$$

In some instances we shall restrict our attention to the case of no scattering or squeezing; where this is clear from the context we shall use the notation (A, C) (or (Ω, C)) to denote that $S = 1$ in our model

Throughout this thesis we shall assume that the QLSs considered are ergodic. This means that if the state of the input is the vacuum, then in the long time limit the system converges to the vacuum state as the unique stationary state.

3.4 The Model: Frequency-Domain Representation

We can also switch from the time domain dynamics described above to the frequency domain picture by taking Laplace transforms. That is, [20]:

$$\breve{\mathbf{b}}^{out}(s) = \Xi(s)\breve{\mathbf{b}}(s), \tag{3.16}$$

where $\Xi(s)$ is *transfer function matrix* of the system

$$\Xi(s) = \left\{1_m - C(s1_n - A)^{-1}C^\flat S\right\} = \begin{pmatrix} \Xi_-(s) & \Xi_+(s) \\ \Xi_+(\bar{s})^\# & \Xi_-(\bar{s})^\# \end{pmatrix}. \tag{3.17}$$

and $\breve{\mathbf{b}}(s)$ and $\breve{\mathbf{b}}^{out}(s)$ are the Laplace transforms of $\breve{\mathbf{b}}(t)$ and $\breve{\mathbf{b}}^{out}(t)$. Although the same notation has been used for the input-output operators in the time- and Laplace-domains, it should be understood going forward that when we use t (s) we are referring to the time domain (Laplace-domain).

In particular, the frequency domain input-output relation is obtained by choosing $s = i\omega$ for $\omega \in \mathbb{R}$. The corresponding commutation relations are $\left[\mathbf{b}(-i\omega), \mathbf{b}(-i\omega')^\#\right] = i\delta(\omega - \omega')\mathbb{1}$, and similarly for the output modes[1]. As a consequence, the transfer matrix $\Xi(-i\omega)$ is symplectic for all frequencies ω [11]. In fact not only is this condition necessary for a QLS, but it was recently shown to be sufficient (see [34]). That is, if

[1]Note that the position of the conjugation sign is important here because in general $\mathbf{b}(-i\omega')^\#$ and $\mathbf{b}^\#(-i\omega')$ are not the same (see the definition of the Laplace transform).

$\Xi(s)$ is symplectic on the imaginary axis, then there is guaranteed to exist a system (A, C) realising it. For this reason, this condition is termed the *frequency domain physical relizability* (FPR) condition.

Finally, we note that while the transfer function is uniquely determined by the triple (S, C, Ω), the converse statement is not true, which is the subject of Ch. 5.

3.5 PQLS

A special case of linear systems is that of *passive* quantum linear systems (PQLSs) for which $C_+ = 0$, $\Omega_+ = 0$ and $S_+ = 0$ [5]. They reason they are referred to as passive systems is because neither the Hamiltonian nor the coupling contain terms require an external source of quanta [11, 25], i.e., the evolution is purely dissipative. This class of QLS is still sufficiently rich to arise in many applications [5, 8, 21, 74, 75], and include optical cavities and beam splitters.

When dealing exclusively with PQLSs, the doubled-up notation is no longer necessary and we shall drop it; PQLSs are characterised by the triple (S_-, C_-, Ω_-) (or (S_-, C_-, A_-)), where the scattering matrix S_- is unitary.

The input-output relation becomes [5, 20]

$$\mathbf{b}^{out}(s) = \Xi(s)\mathbf{b}(s), \tag{3.18}$$

where the transfer function is given by

$$\Xi(s) = \left\{1_m - C_-(s1_n - A_-)^{-1}C_-^\dagger\right\}S, \tag{3.19}$$

which is **unitary** for all $s = -i\omega \in i\mathbb{R}$.

The PR and FPR conditions in this case are: $A_- + A_-^\dagger + C_-^\dagger C = 0$, and $\Xi(s)$ is unitary on the imaginary axis of the complex plane, respectively.

3.6 Examples of Quantum Linear Systems

Example 1. *[5, 22] Our first example is an optical cavity, illustrated in Fig. 3.2 (a), which is a passive QLS with one internal mode* $\mathbf{a}$ *and one field* $\mathbf{B}(t)$*. The system*

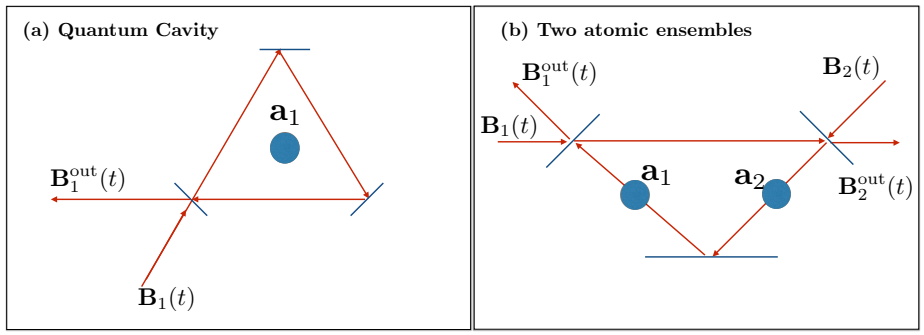

FIGURE 3.2: Circuit diagram illustration for (a) a quantum cavity and (b) two atomic ensembles.

dynamics are given by

$$d\mathbf{a} = (-i\omega_0 - \frac{\kappa}{2})d\mathbf{a} - \sqrt{\kappa}d\mathbf{B}$$
$$d\mathbf{B}^{out} = \sqrt{\kappa}d\mathbf{a} + d\mathbf{B},$$

where κ is the transmitivity of the coupling mirrors and ω_0 is the detuning, which represents the frequency difference between the inner and outer optical fields [5]. Note that in this case $(S, C, \Omega) = (1, \sqrt{\kappa}, \Omega_0)$.

Example 2. *[11, 29] A degenerate parametric amplifier (DPA) can be modelled as a single mode, $\mathbf{a}$, coupled to a single field, $\mathbf{B}(t)$. Here $S = 1$, $\Omega_- = 0$, $\Omega_+ = \frac{i}{2}\epsilon$ $(\epsilon > 0)$, $C_- = \sqrt{\kappa}$ and $C_+ = 0$.*

Now, using (3.17) the transfer function of this system is given by

$$\Xi(s) = \frac{1}{s^2 + \kappa s + \frac{\kappa^2+\epsilon^2}{4}} \begin{pmatrix} s^2 - \frac{\kappa^2+\epsilon^2}{4} & -\frac{1}{2}\epsilon\kappa \\ -\frac{1}{2}\epsilon\kappa & s^2 - \frac{\kappa^2+\epsilon^2}{4} \end{pmatrix}.$$

Interestingly, by rescaling $\kappa = k\kappa_0$, $\epsilon = k\epsilon_0$, $s \mapsto \frac{s}{k}$ and taking the limit $k \mapsto \infty$, results in the following symplectic transformation as the input-output map:

$$\mathbf{b}^{out}(s) = \cosh(r_0)\mathbf{b}(s) + \sinh(r_0)\mathbf{b}^\dagger(s),$$

where $r_0 = \ln\left[(\kappa_0 - \epsilon_0)/(\kappa_0 + \epsilon_0)\right]$ [29]. Therefore, the output is squeezed white noise from vacuum, which is constant across $s \in \mathbb{C}$ (see Sec. 3.7.2). Essentially this DPA

implements a static squeezing device in the field for which the internal degrees of freedom of the DPA system are eliminated [11]. This example was taken from [11].

Example 3. *[5, 76] Finally, consider the setup of two coupled atomic ensembles investigated in [76] (see Fig. 3.2 (b)). In an ideal large ensemble limit, this system has the form of linear passive system with two probe inputs* $\mathbf{b} = [\mathbf{b}_1, \mathbf{b}_2]^T$ *and two outputs* $\mathbf{b}^{out} = [\mathbf{b}_1^{out}, \mathbf{b}_2^{out}]^T$*:*

$$\dot{\mathbf{a}} = -\frac{\kappa}{2} Y \mathbf{a} - \sqrt{\kappa Y}\mathbf{b}, \quad \mathbf{b}^{out} = \sqrt{\kappa Y}\mathbf{a} + \mathbf{b},$$

where $\mathbf{a} = [\mathbf{a}_1, \mathbf{a}_2]^T$ *denotes the pair of collective lowering operators of the atomic ensembles and* κ *is the decay rate. The system-probe coupling is governed by the following matrix:*

$$Y = \begin{bmatrix} \cosh(2\theta) & -\sinh(2\theta) \\ -\sinh(2\theta) & \cosh(2\theta) \end{bmatrix},$$

which stems from the coupling operators $\mathbf{L}_1 = \mathbf{a}_1 \cosh(\theta) + \mathbf{a}_2^\dagger \sinh(\theta)$ *and* $\mathbf{L}_2 = \mathbf{a}_2 \cosh(\theta) + \mathbf{a}_1^\dagger \sinh(\theta)$*. The parameter* θ *represents the coupling strength between the two ensembles. In fact in the long time limit* $t \to \infty$ *the system's steady state becomes a two-mode squeezed state with squeezing level* θ*; that is, this system deterministically generates an entangled state between two large-scale atomic ensembles by dissipation (if* $\theta = 0$ *the ensembles are not entangled). Hence, the precise estimation of* θ *is important for testing whether such a macroscopic system exhibits entanglement (see Sec. 7.1.3 where we treat this parameter as unknown and try to identify it). The more general case of pure Gaussian cluster states may also be generated via a PQLS composed of atomic ensembles [5, 77]. This example was worked from [5].*

3.7 Time-Dependent vs Stationary Inputs

As mentioned above, we are free to choose the input to the field channels. We distinguish two contrasting approaches; using time-dependent inputs or time stationary Gaussian (quantum noise) inputs (note the parallels with Sec. 2.3). We discuss both approaches in turn in this subsection.

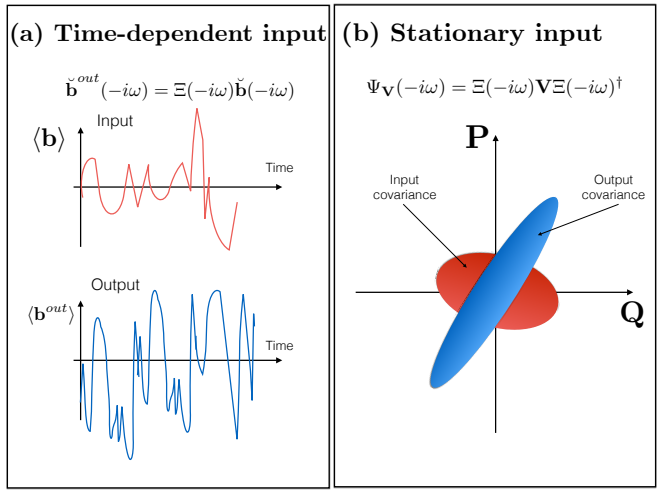

FIGURE 3.3: (a) Time-dependent scenario: in frequency domain, input and output are related by the *transfer function* $\Xi(-i\omega)$ which depends on (S, C, Ω). (b) Stationary scenario: *power spectrum* describes output covariance which is quadratic with respect to $\Xi(-i\omega)$

.

3.7.1 Time-Dependent Inputs

In the time-dependent approach, one probes the system with a known time-dependent input signal (e.g. a coherent state (example 4)). One then performs measurements on the time-dependent output to infer unknown dynamical parameters within the QLS (see Fig. 3.3). The input-output relation (3.16) shows that the experimenter can at most identify the transfer function $\Xi(s)$ of the system. Therefore, in this setting the transfer function entirely encapsulates the QLSs behaviour.

Example 4. *As an example, suppose that we have a PQLS and probe with a coherent state of time dependent amplitude $\alpha(t)$, which is defined as*

$$|\alpha(t)\rangle = \exp\left[i\int_{-\infty}^{\infty} \breve{\alpha}(t)\breve{\mathbf{b}}^{\dagger}(t)dt\right]|0\rangle\,, \tag{3.20}$$

where $|0\rangle$ is vacuum (ground) state. Note that the quantity $\int_{-\infty}^{\infty}|\alpha(t)|^2dt$ gives the energy of the coherent pulse; so $|\alpha(t)|^2$ may be interpreted as the mean number of photons at time t. Notice the similarities with coherent states of QHOs (see Eq. (3.3)).

In the frequency domain, the input is a product of coherent states over frequency modes, each with amplitude $\alpha(\omega)$ (the Fourier transform of $\alpha(t)$). It follows from (3.18) that the output state frequency profile will be $\Xi(-i\omega)\alpha(\omega)$. Finally, as the transfer function is unitary, the result of the interaction with the system is a frequency dependent rotation of the coherent state amplitude.

3.7.2 Stationary Inputs

In the second approach we consider probing the system with *time-stationary* pure gaussian states (see Fig. 3.3). That is, the input state is 'squeezed quantum noise', i.e. a zero-mean, pure Gaussian state with time-independent increments. It is completely characterised by its covariance matrix V, which is given by

$$\left\langle \begin{smallmatrix} d\mathbf{B}(t)d\mathbf{B}(t)^\dagger & d\mathbf{B}(t)d\mathbf{B}(t)^T \\ d\mathbf{B}^\#(t)d\mathbf{B}(t)^\dagger & d\mathbf{B}^\#(t)d\mathbf{B}(t)^T \end{smallmatrix} \right\rangle = \begin{pmatrix} N^T+1 & M \\ M^\dagger & N \end{pmatrix} dt$$
$$:= V(N,M)dt. \tag{3.21}$$

In the frequency domain the input state turns out to be a continuous tensor product over frequency QHO modes of squeezed states with covariance $V(N,M)$ (recall Sec. 3.1). Therefore, the conditions on $V(N,M)$ transfer directly from Sec. 3.1. By the requirement that the input be *pure*, we mean that the covariance matrix $V(N,M)$ is that of pure state, where the conditions are defined in Sec. 3.1.

Under ergodicity, the dynamics exhibits an initial transience period after which it reaches stationarity. Therefore, since we deal with a linear systems the input-output map consists of applying a (frequency dependent) unitary Bogolubov transformation whose linear symplectic action on the frequency modes is given by the transfer function

$$\breve{\mathbf{b}}^{out}(-i\omega) = \Xi(-i\omega)\breve{\mathbf{b}}(-i\omega).$$

Consequently, the output state is a gaussian state consisting of independent frequency modes with covariance matrix

$$\left\langle \breve{\mathbf{b}}^{out}(-i\omega)\breve{\mathbf{b}}^{out}(-i\omega')^\dagger \right\rangle = \Psi_V(-i\omega)\delta(\omega-\omega')$$

where $\Psi_V(-i\omega)$ is the restriction to the imaginary axis of the *power spectral density* (PSD) (or power spectrum) defined in the Laplace domain by

$$\Psi_V(s) = \Xi(s)V\Xi(-s^*)^\dagger. \tag{3.22}$$

We should comment on the physicality of (quantum) white noise. As we have seen above, the PSD of white noise is constant and as a result, by integrating over all frequencies, the average power will be infinite. As no real process can have infinite signal power, this type of input is therefore purely theoretical. However, many real and important stochastic processes have a PSD that is approximately constant constant over a wide range of frequencies. In practice one works with band-limited white noise, that is, where the frequency is constant over a finite range and zero outside. Band-limited white-noise necessarily has finite signal power. Band-limited white noise is generated using a low-pass filter.

3.8 Controllability, Observability, Minimality, Stability

We now reconnect with the system theoretic concepts from Sec. 2.2.

By taking the expectation with respect to the initial joint system state of Eqs. (3.12) we obtain the following classical linear system

$$d\left\langle \breve{\mathbf{a}}(t)\right\rangle = A\left\langle \breve{\mathbf{a}}(t)\right\rangle dt - C^\flat d\left\langle \breve{\mathbf{B}}(t)\right\rangle, \tag{3.23}$$

$$d\left\langle \breve{\mathbf{B}}^{out}(t)\right\rangle = C\left\langle \breve{\mathbf{a}}(t)\right\rangle dt + d\left\langle \breve{\mathbf{B}}(t)\right\rangle. \tag{3.24}$$

Definition 7. *The quantum linear system (3.12) is said to be Hurwitz stable (respectively controllable, observable, minimal) if the corresponding classical system (3.23) is Hurwitz stable (respectively controllable, observable, minimal).*

For a general QLS observability and controllability are equivalent [17] (see also [5] for PQLS result). Therefore, to verify minimality we need only check one of these properties. In the case of passive systems Hurwitz stability is further equivalent to minimality of the system [5, 78]. However for active systems, only the statement

[Hurwitz $\implies$ minimal] is true, whereas the converse statement ([minimal $\implies$ Hurwitz]) is not necessarily so. We see the former statement in the following Lemma and then discuss a counterexample to the latter in example 5.

Lemma 1. *If a QLS (S, C, A) is Hurwitz, then it is minimal.*

Proof. We will prove this statement by contradiction. To this end, suppose that (S, C, A) is non-minimal, which is equivalent to it being non-observable. Therefore, by Theorem 2 part 3, there exists an eigenvector y and eigenvalue λ of A, such that $Cy = 0$. This entails that $-iJ\Omega y = \lambda y$. Hence using the self-adjointness of Ω, we have

$$\left(y^\dagger J\right)(iJ\Omega) = \overline{\lambda}\left(y^\dagger J\right) \tag{3.25}$$

Furthermore,

$$(y^\dagger J)(C^\flat C) = 0 \tag{3.26}$$

from $Cy = 0$. Combining (3.25) and (3.26) implies that $\left(y^\dagger J\right) A = -\left(y^\dagger J\right)\overline{\lambda}$. So in summary λ and $-\overline{\lambda}$ are eigenvalues of A, which cannot be under stability.

Note that an alternative proof of this Lemma is given in [26]. □

Example 5. *Consider a general one-mode SISO QLS, which is parameterised by $\Omega = \Delta(\omega_-, \omega_+)$ and $C = \Delta(c_-, c_+)$. The system is Hurwitz stable (i.e. the eigenvalues of A have strictly negative real part) if and only if*

(1) $|c_-| > |c_+|$ and $|\omega_-| \geq |\omega_+|$, or

(2) $|\omega_+| > |\omega_-|$ and $\sqrt{|\omega_+|^2 - |\omega_-|^2} < \frac{1}{2}\left(|c_-|^2 - |c_+|^2\right)$.

A system is non-minimal if and only if the following matrix has rank less than two:

$$\left[\begin{smallmatrix} C \\ CJ_n\Omega \end{smallmatrix}\right] = \begin{bmatrix} c_- & c_+ \\ \overline{c}_+ & \overline{c}_- \\ c_-\omega_- - c_+\overline{\omega}_+ & c_-\omega_+ - c_+\omega_- \\ \overline{c}_+\omega_- - \overline{c}_-\overline{\omega}_+ & \overline{c}_+\omega_+ - \overline{c}_-\omega_- \end{bmatrix}.$$

For a counterexample to the statement: [minimal $\implies$ Hurwitz] consider for example $|c_+| > |c_-|$ with $\omega_+ = \omega_-$.

In light of the previous example, we make the physical assumption that all systems considered throughout this paper are Hurwitz (hence minimal). Note that the *ergodic* assumption in Sec. 3.3 is equivalent to the system being Hurwitz. Notice that if $t|\mathrm{Re}(\lambda_s(A))| \ll 1$, where $\lambda_s(A)$ is the eigenvalue of A lying closest to the imaginary axis, then the first term in Eq. (3.14) contributes negligibly. Therefore $\lambda_s(A)$ determines the time taken for the system to stabilise. We call $|\mathrm{Re}(\lambda_s(A))|$ the *spectral gap* and will be useful in Ch. 8. Moreover, in the case of stationary inputs the relaxation of the system to stationary state is related to the spectral gap. That is, $||\rho(t) - \rho_{ss}|| \sim e^{t|\mathrm{Re}(\lambda_s(A))|}$ [79], where $\rho(t)$ and ρ_{ss} are the state of the system at time t and the stationary state of the system, respectively.

Finally we remark that minimality is a reasonable assumption to make in the quantum regime too. For if a system is non-minimal, then there exists a minimal system that has the same transfer function as the original system and crucially it satisfies the PR conditions [80]. Such a system can be obtained by using the *quantum Kalman decomposition* [80]. This result was essentially obtained by combining the *classical* Kalman decomposition [49] with the FPR condition (see Sec. 3.4). As the transfer function contains maximal information about the system, therefore minimality ensures the simplest description of the input-output behaviour.

3.9 Operations on QLSs

The network rules discussed in Sec 2.5 for CLSs, i.e the concatenation and series connections, also hold for QLSs. Notice the simplicity of the frequency domain in dealing with cascaded systems - their transfer functions multiply. Note that if (S_1, C_1, Ω_1) with transfer function $\Xi_1(s)$ is fed into system (S_2, C_2, Ω_2) with transfer function $\Xi_2(s)$ the overall transfer function is given by $\Xi(s) = \Xi_2(s)\Xi_1(s)$, rather than $\Xi_1(s)\Xi_2(s)$.

Remark 2. *A remark that these rules are valid provided that the delays in the circuits between the components are negligible compared with the interaction times within the QLS. Treating the case of finite time delays leads to a non-Markovian model and as such is often not tractable. However, we would like to make the reader aware of [81], where a novel application of tensor networks is used for non-negligible time-delays.*

Chapter 4

Quantum Fisher-Information and the Heisenberg Limit

4.1 Estimation Theory

In this section we review the relevant aspects of quantum estimation theory that are used in this thesis. Let ρ_θ be a quantum state which depends on a d-dimensional unknown parameter $\theta = [\theta_1, \theta_2, \ldots, \theta_d]^T$. In quantum estimation theory the goal is to estimate θ by performing a measurement $\mathbf{M}$ and constructing an estimator $\hat{\theta}(X)$ based on the measurement outcome X. Suppose for simplicity that X takes values in a discrete set $\{1, \ldots, p\}$. Then the probability distribution of the outcomes is of the form $\mathbb{P}_\theta(X = i) = \mathrm{Tr}(\rho_\theta \mathbf{M}_i)$ where $\{\mathbf{M}_1, \ldots, \mathbf{M}_p\}$ is the positive operator valued measure associated to $\mathbf{M}$. The (classical) Cramér-Rao bound gives a measure of the performance of a given measurement [82]; if $\hat{\theta}$ is an arbitrary unbiased estimator ($\mathbb{E}(\hat{\theta}) = \theta$) then its error covariance matrix is lower bounded as

$$\mathrm{Cov}(\hat{\theta}) := \mathbb{E}_\theta\Big[\big(\hat{\theta} - \theta\big)\big(\hat{\theta} - \theta\big)^T\Big] \geq I^{(M)}(\theta)^{-1}. \tag{4.1}$$

The right side is the inverse of the (classical) Fisher information matrix $I^{(M)}(\theta)$ (CFI), associated to the outcome X of $\mathbf{M}$, whose matrix elements are given by

$$I^{(M)}(\theta)_{i,j} = \mathbb{E}_\theta\left[\frac{\partial \mathbb{P}_\theta(X)}{\partial \theta_i}\frac{\partial \mathbb{P}_\theta(X)}{\partial \theta_j}\right]. \tag{4.2}$$

If one considers arbitrary measurements, an additional level of optimization is

required. The *quantum Cramér-Rao bound* (QCRB) establishes that any CFI matrix is upper bounded as

$$I^{(M)}(\theta) \leq F(\theta). \tag{4.3}$$

On the right side, $F(\theta)$ is the quantum Fisher-information (QFI) matrix for the family ρ_θ, whose elements are defined by [83]

$$F(\theta)_{lm} = \frac{1}{2}\mathrm{Tr}\left[\rho_\theta\{\mathbf{L}_l, \mathbf{L}_m\}\right],$$

where $\mathbf{L}_m$ is the symmetric logarithmic derivative (SLD) defined implicitly by

$$\partial\rho_\theta/\partial\theta_m = \left(\rho_\theta\mathbf{L}_m + \mathbf{L}_m\rho_\theta\right)/2.$$

For families of pure states $\rho_\theta = |\psi_\theta\rangle\langle\psi_\theta|$ the QFI has an explicit expression

$$F(\theta)_{lm} = 4\mathrm{Re}\left(\langle\partial_l\psi_\theta\,|\,\partial_m\psi_\theta\rangle - \langle\partial_l\psi_\theta\,|\,\psi_\theta\rangle\langle\psi_\theta\,|\,\partial_m\psi_\theta\rangle\right), \tag{4.4}$$

where $|\partial_m\psi_\theta\rangle := \partial|\psi_\theta\rangle/\partial\theta_m$. In particular, if $|\psi_\theta\rangle = \exp(-i\mathbf{G}\theta)|\psi_0\rangle$ is a one dimensional unitary rotation model with generator G, the QFI is

$$F(\theta) = 4\mathrm{Var}\left(\mathbf{G}\right) = 4\left[\langle\psi_0|\mathbf{G}^2|\psi_0\rangle - \langle\psi_0|\mathbf{G}|\psi_0\rangle^2\right]. \tag{4.5}$$

The QCRB provides a lower bound for the risk of unbiased estimators, for instance the mean square error. By taking trace on both sides of Eq. (4.1) and using Eq. (4.3) we have

$$\mathbb{E}\|\hat{\theta} - \theta\|^2 \geq \mathrm{Tr}\left(F(\theta)^{-1}\right). \tag{4.6}$$

The above bounds are generally not tight, for reasons which are both classical and quantum. The classical Cramér-Rao bound (4.1) is achievable only for special "exponential models"; it is however *asymptotically* achievable for any model, in the limit of large numbers of *independent* samples from the distribution $\mathbb{P}_\theta$, which could be obtained by performing repeated measurements on identically prepared systems. The QCRB (4.3) is in general not achievable, even asymptotically, i.e. when the experimenter is allowed to perform arbitrary measurements on the ensemble $\rho_\theta^{\otimes n}$ of n identically prepared systems. Indeed, it can be shown [84] that in order to

optimally estimate the component θ_i one needs to measure the collective observable $\mathbf{L}_i^n := \sum_{j=1}^n \mathbf{L}_i^{(j)}$ where $\mathbf{L}_i^{(j)}$ is the symmetric logarithmic derivative of the jth system with respect to θ_i. These observables are generally incompatible unless the following commutativity condition holds: $\mathrm{Tr}(\rho_\theta[\mathbf{L}_i, \mathbf{L}_j]) = 0$, for all $i = 1, \ldots, d$. In the special case of one-dimensional parameter, the QCRB is asymptotically achievable for large sample numbers, by separately measuring the SLD $\mathbf{L}^{(j)}$ of each system.

4.2 Quantum Metrology and the Heisenberg Limit

Quantum metrology is the ingenuity of exploiting powerful properties of quantum theory, such as entanglement and squeezing, in order to develop high-resolution measurements of physical parameters [82]. Such properties have no classical analogue, and as a result one is able to develop measurement techniques that give better precision (i.e. the so-called Heisenberg limit) than is possible in the classical framework. Already, various aspects of quantum metrology for system identification have been considered in the recent literature [85–89].

Above, we considered the case of a single, or several independent, identically prepared systems. In quantum metrology we often encounter a scenario in which a single unknown parameter θ is encoded by means of a unitary transformation $\mathbf{U}_\theta = e^{-i\theta\mathbf{G}}$ acting in parallel on an ensemble of N quantum systems (probes). We distinguish two set-ups, as illustrated in Fig. 4.1; either the probes are prepared in the product state $|\psi\rangle^{\otimes N}$ (or more generally a separable state), or they are prepared in a general entangled state.

The first case corresponds to a classical procedure in which N identical experiments are repeated. As shown in Eq. (4.5), in this case the QFI is $4N\mathrm{Var}(\mathbf{G})$. This can be maximised by choosing a probe that is an equal superposition of the largest and smallest eigenstates of the generator $\mathbf{G}$, namely $(|\lambda_{min}\rangle + |\lambda_{max}\rangle)/\sqrt{2}$ [90], so that $F_{max}(\theta) = N(\lambda_{max} - \lambda_{min})^2$. The linear scaling in N is called the *standard quantum limit* (SQL), and is the best one can achieve with separable states.

In the second case, the unitary transformation is applied to the joint state $|\psi^N\rangle$ such that $|\psi_\theta^N\rangle := \mathbf{U}_\theta^{\otimes N}|\psi^N\rangle$. In this case, the best probe state is an equal superposition of the maximum and minimum eigenvectors of the global operator

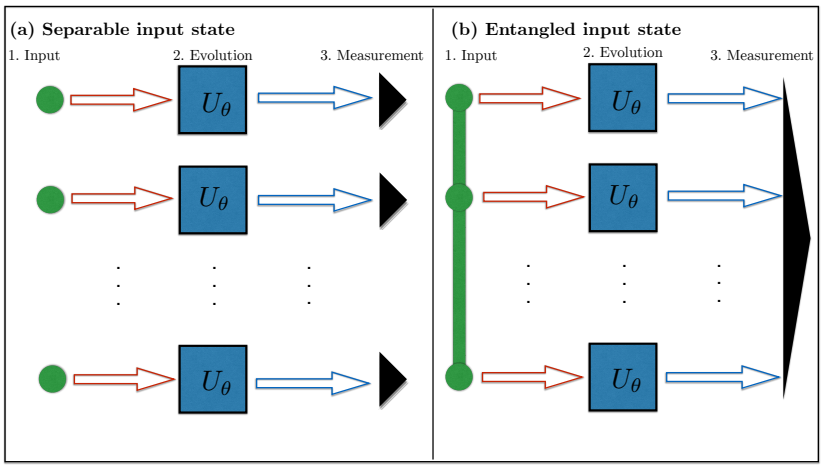

FIGURE 4.1: This figure compares the classical and quantum estimation strategies discussed in Sec. 4.2. In panel (a) one inputs a product state. The upshot is that each channel corresponds to an identical and independent experiment. In panel (b) the input is entangled over N channels. In each setup, there are three stages for the estimation procedure, which are: 1) preparing an input, 2) evolution of the state, and 3) measurement of the output.

$\mathbf{G}^N := \sum_i \mathbf{G}^{(i)}$. That is, choosing $|\psi^{\otimes N}\rangle = \left(|\lambda_{min}\rangle^{\otimes N} + |\lambda_{max}\rangle^{\otimes N}\right)/\sqrt{2}$ leads to the QFI $F(\theta) = N^2\left(\lambda_{max} - \lambda_{min}\right)^2$. Therefore, by exploiting quantum resources such as entanglement, we obtain an $\mathcal{O}(N)$ improvement over purely classical schemes. This $\mathcal{O}(N^2)$ scaling is referred to as the *Heisenberg limit* and for a fixed number of systems has been claimed as fundamental as it is brought about by Heisenberg-like uncertainty relations [91]. It is worth mentioning here that in general Heisenberg scaling holds for unitary channels, while for noisy channels one typically recovers the standard scaling [6].

Part II

Results

Chapter 5

Transfer Function Identification

The purpose of this chapter is to investigate system identification for QLSs using **time-dependent inputs** and by observing the output fields. In particular, we address the following questions:

(1) Which parameters can be identified by measuring the output?

(2) How can we construct a system realisation from sufficient input-output data?

We saw in Sec. 3.7.1 that the input-output dynamics is completely characterised by the transfer function for the case of time-dependent inputs. The first question above reduces to finding all equivalent systems with the same transfer function. We call two QLSs with the same transfer function, *transfer function equivalent* (TFE). We answer this in Sec. 5.1 by finding the quantum analogue of the classical result in Theorem 3. Note that this problem has been addressed for the special class of passive QLSs in [5]. The tricky part in answering the second question is in ensuring that the realisation of the transfer function corresponds to a physical QLS in the sense that it satisfies the physical realisability conditions (3.15). We give two two such realisation methods in Secs. 5.3 and 5.4.

Finally, we consider these identifiability problems in the context of noisy QLSs in Sec. 5.5. Noise may be modelled with the use of additional channels that cannot be accessed (i.e., measured or observed) [13]. As a result, when restricting the output to only a subset of the channels the equivalence classes from Sec. 5.1 grow larger. Finally, in Sec. 5.5.2 we investigate the notion of *noise unobservable subspaces* where part of the system is shielded from the noise. Noise unobservable subspaces could potentially offer applications to metrology or control.

5.1 Identifiability

In this section we address the first identifiability question above for general QLSs. Before giving our main result let us review the case of passive QLSs considered in [5]. Firstly, the transfer function can be identified for example by following the method in example 4. For PQLS it is known that two minimal systems with parameters (Ω, C, S) and (Ω', C', S') are equivalent if and only if their parameters are related by a unitary transformation, i.e. $C' = CT$ and $\Omega' = T\Omega T^\dagger$ for some $n \times n$ unitary matrix T, and $S = S'$. The first part of this result was shown in [78]; the fact that the scattering matrices must be equal follows by choosing $s = -i\omega$ and taking the limit $\omega \to \infty$ in Eq. (3.19). Physically, this means that at frequencies far from the internal frequencies of the system, the input-output is dominated by the scattering/squeezing between the input fields.

Our main identifiability result for this section is given in the following theorem.

Theorem 5. *Let (S, C, Ω) and (S', C', Ω') be two minimal and stable QLSs. Then they have the same transfer function if and only if there exists a symplectic matrix T (see Definition 6) such that*

$$J_n\Omega' = TJ_n\Omega T^\flat, \;\; C' = CT^\flat \;\; S = S'. \tag{5.1}$$

Proof. Firstly, using the same argument as above, the scattering/squeezing matrices S and S' must be equal.

It is known [38] that two minimal classical linear systems

$$d\mathbf{x}(t) = A\mathbf{x}(t)dt + B\mathbf{u}(t)dt, \;\; d\mathbf{y}(t) = C\mathbf{x}(t)dt + D\mathbf{u}(t)dt \tag{5.2}$$

and

$$d\mathbf{x}(t) = A'\mathbf{x}(t)dt + B'\mathbf{u}(t)dt, \;\; d\mathbf{y}(t) = C'\mathbf{x}(t)dt + D'\mathbf{u}(t)dt \tag{5.3}$$

for input $\mathbf{u}(t)$, output $\mathbf{y}(t)$ and system state $\mathbf{x}(t)$ have the same transfer function if and only if

$$A' = TAT^{-1} \;\; B' = TB \;\; C' = CT^{-1} \;\; D' = D$$

for some invertible matrix T. Therefore $C\left(s1-A\right)^{-1}C^{\flat}=C'\left(s1-A'\right)^{-1}C'^{\flat}$ if and only if there exists an invertible matrix T such that

$$A'=TAT^{-1}\quad C'^{\flat}=TC^{\flat}\quad C'=CT^{-1}. \tag{5.4}$$

Note that at this stage T is not assumed to be symplectic; we show that by imposing the restriction that the two systems (5.2) and (5.3) be quantum implies that T must be symplectic. Now, the second and third conditions in (5.4) implies $C=C\left(T^{\flat}T\right)$, which further implies that $[T^{\flat}T,C^{\flat}C]=0$. Also, by earlier definitions $A=-\frac{1}{2}C^{\flat}C-iJ_n\Omega$, so that the second and third conditions applied to the first condition (in (5.4)) implies that $J_n\Omega'=TJ_n\Omega T^{-1}$. Next, using this and the observation $\left(J_n\Omega\right)^{\flat}=J_n\Omega$ it follows that $[T^{\flat}T,J_n\Omega]=0$.

Now, $C\left(J_n\Omega\right)^k=C\left(T^{\flat}T\right)\left(J_n\Omega\right)^k=C\left(J_n\Omega\right)^k\left(T^{\flat}T\right)$ which means that the observability matrix $\mathcal{O}$ satisfies $\mathcal{O}=\mathcal{O}T^{\flat}T$. Because the system is minimal $\mathcal{O}$ must be full rank, hence $T^{\flat}T=1$.

Finally, it remains to show that the matrix T generating the equivalence class is of the form

$$T=\begin{pmatrix} T_1 & T_2 \\ T_2^{\#} & T_1^{\#}\end{pmatrix}.$$

To see this, observe that CA^k, $C'A'^k$ must be of the of this doubled up form for $k\in\{0,1,2,...\}$. Writing CA^k, $C'A'^k$ and T as $\begin{pmatrix} P_{(k)} & Q_{(k)} \\ Q_{(k)}^{\#} & P_{(k)}^{\#}\end{pmatrix}$, $\begin{pmatrix} P'_{(k)} & Q'_{(k)} \\ Q'^{\#}_{(k)} & P'^{\#}_{(k)}\end{pmatrix}$ and $T=\left(\begin{smallmatrix} T_1 & T_2 \\ T_3 & T_4\end{smallmatrix}\right)$, and using the above result, $C'A'^k=CA^kT^{\flat}$, it follows that

$$P_{(k)}(T_1^{\dagger}-T_4^T)+Q_{(k)}(T_3^T-T_2^{\dagger})=0$$

and

$$Q_{(k)}^{\#}(T_1^{\dagger}-T_4^T)+P_{(k)}^{\#}(T_3^T-T_2^{\dagger})=0.$$

Hence

$$\mathcal{O}\begin{bmatrix} T_1^{\dagger}-T_4^T \\ T_3^T-T_2^{\dagger}\end{bmatrix}=0$$

and so using the fact that $\mathcal{O}$ is full rank gives the required result. □

Therefore, without any additional information, we can at most identify the equivalence class of systems related by a symplectic transformation (on the system). Note

that the above transformation of the system matrices is equivalent to a change of co-ordinates $\breve{\mathbf{a}} \mapsto T^\flat \breve{\mathbf{a}}$ in Eq. (3.12).

We can obtain the result for PQLSs from [5] as a Corollary to Theorem 5.

Corollary 1. *Let (S, C_-, Ω_-) and $\left(S', C'_-, \Omega'_-\right)$ be two minimal PQLSs. Then they have the same transfer function if and only if there exists a unitary transformation U such that*

$$\Omega'_- = U\Omega_- U^\dagger \quad C'_- = C_- U^\dagger \quad S = S'. \tag{5.5}$$

Proof. Firstly the scattering matrix S and S' must be equal using the argument above Theorem 5.

Write the two PQLSs in doubled-up form so that $A = \begin{pmatrix} A_- & 0 \\ 0 & A_-^\# \end{pmatrix}$, $C = \begin{pmatrix} C_- & 0 \\ 0 & C_-{}^\# \end{pmatrix}$, $A_- = -i\Omega_- - \frac{1}{2}C_-^\dagger C_-$ and similarly for the primed matrices.

Since PQLSs are special cases of QLSs, we can apply Theorem 5 so that the two systems are related via:

$$A' = UAU^\flat \quad C' = CU^\flat, \tag{5.6}$$

where U is symplectic. The relations (5.6) imply that $C'A'^k = CA^kU^\dagger$ for all $k \in \mathbb{N}_0$. Therefore, writing $U = \Delta(U_1, U_2)$ and using the block diagonality of C, C', A, A' implies that $C_- A_-^k U_2 = 0$ for all k. Hence $U_2 = 0$ by minimality. Therefore U is unitary and symplectic, which is equivalent to the statement in the Theorem on the non-doubled-up space. □

It is worth noting that while in the classical set-up equivalent linear systems are related by similarity transformations (see Theorem 3), in both quantum scenarios described above the transformations are more restrictive due to the unitary nature of the dynamics.

In light of these results, we make the following definition [5].

Definition 8. *Let $(S(\theta), C(\theta), \Omega(\theta))$ be a minimal system and $\theta \in \Theta$ an unknown parameter. Then θ is identifiable if and only if*

$$S(\theta') = S(\theta) \quad C(\theta') = C(\theta)T^\flat \quad J_n\Omega(\theta') = TJ_n\Omega(\theta)T^\flat,$$

where T is a symplectic matrix, implies $\theta = \theta'$.

5.2 Cascade Realisation of QLS

Recently, a synthesis result has been established showing that the transfer function of a 'generic' QLS has a pure cascade realisation [15]. Translated to our setting, this means that given an n-mode QLS (C, Ω), one can construct an equivalent system (i.e. with the same transfer function) which is a series product of single mode systems. The result holds for a large class of systems, including all PQLSs [75]. At the heart of the construction of the cascade realisation for a generic QLS is a sort of symplectic Schur decomposition [15] (using symplectic similarity transformations, rather than unitary ones). Just like the ordinary Schur decomposition, one is free to reorder the elements on the main diagonal by applying a suitable symplectic transformation (in the ordinary Schur decomposition, this is would be a unitary transformation). By Theorem 5 this leaves the transfer function invariant. It turns out that this degeneracy exactly corresponds to the ordering of the systems. It should be stressed though that the one-mode systems in each Schur decomposition may be different, which is a signature of non-commuting systems in the cascade realisation (see example 6 below). We remark that the cascade realisation is an example of one type of realisation for QLSs. Other realisations are the *independent oscillator representation* and the *chain-mode realisation* for example [17]. The underlying feature of any good realisation is that they provide a simple model for the system's behaviour.

Example 6. *Consider a two mode cascaded PQLS, where the system* $(C_1, \Omega_1) = (\left(\begin{smallmatrix} 2 \\ 0 \end{smallmatrix}\right), 0)$ *is fed into the system* $(C_2, \Omega_2) = (\left(\begin{smallmatrix} 6 \\ 3 \end{smallmatrix}\right), 4)$ *and denote their transfer functions by* $\Xi^{(1)}(s)$ *and* $\Xi^{(2)}(s)$ *respectively. The combined transfer function is given by* $\Xi(s) = \Xi_2(s)\Xi_1(s)$.

Now the pair of cascaded systems $\left(\tilde{C}_1, \tilde{\Omega}_1\right) = \left(\left(\begin{smallmatrix} (2-6x)/(1+|x|^2) \\ -3x/(1+|x|^2) \end{smallmatrix}\right), 4\right)$ *with transfer function* $\tilde{\Xi}_1(s)$ *and* $\left(\tilde{C}_2, \tilde{\Omega}_2\right) = \left(\left(\begin{smallmatrix} (2x+6)/(1+|x|^2) \\ 3/(1+|x|^2) \end{smallmatrix}\right), 0\right)$ *with transfer function* $\tilde{\Xi}_2(s)$, *where* $x = 41/24 - 1/3i$, *also has the same combined transfer function. Notice that* $\Xi_1(s) \neq \tilde{\Xi}_1(s)$ *and* $\Xi_2(s) \neq \tilde{\Xi}_2(s)$.

In this remainder of this subsection we shall assume that the QLS is SISO. If such a cascade realisation is possible, then the transfer function can be written as a

product of n transfer functions of single mode systems, which are given by

$$\Xi_i(s) = \begin{pmatrix} \Xi_{i-}(s) & \Xi_{i+}(s) \\ \Xi_{i+}(\bar{s})^{\#} & \Xi_{i-}(\bar{s})^{\#} \end{pmatrix}.$$

Further, we can stipulate that the coupling to the field is of the form $C = \Delta(C_-, 0)$, with each element of C_- being real and positive. Indeed, since the system is assumed to be stable, there exists a local symplectic transformation on each mode so that coupling is purely passive. The point of this requirement is that it fixes all the parameters, so that under these restrictions each equivalence class from Sec. 5 contains exactly one element. Note that the Hamiltonian may still have both active and passive parts. Therefore, each one mode system in the series product is characterised by three parameters, $c_i, \Omega_{i-} \in \mathbb{R}$ with $c_i \neq 0$, and $\Omega_{i+} \in \mathbb{C}$. If $\Omega_{i+} = 0$ then the mode is passive. Actually, it is more convenient for us here to reparameterize the coefficients so that

$$\Xi_{i-}(s) = \frac{s^2 - x_i^2 - y_i^2 + 2ix_i\theta_i}{(s + x_i + y_i)(s + x_i - y_i)}, \tag{5.7}$$

$$\Xi_{i+}(s) = \frac{-2ix_i e^{i\phi_i}\sqrt{y_i^2 + \theta_i^2}}{(s + x_i + y_i)(s + x_i - y_i)}, \tag{5.8}$$

where $x_i = \frac{1}{2}c_i^2, y_i = \sqrt{|\Omega_{i+}|^2 - \Omega_{i-}^2}, \theta_i = \Omega_{i-}$ and $\phi_i = \arg(\Omega_{i+})$. Therefore, from the properties of the individual $\Xi_{i\pm}(s)$, $\Xi_-(s)$ and $\Xi_+(s)$ can be written as

$$\Xi_-(s) = \prod_{i=1}^{n} \frac{(s - \lambda_i)(s + \lambda_i)}{(s + x_i + y_i)(s + x_i - y_i)} \tag{5.9}$$

$$\Xi_+(s) = \gamma \frac{\prod_{i=1}^{j} (s - \gamma_i)(s + \gamma_i)}{\prod_{i=1}^{n} (s + x_i + y_i)(s + x_i - y_i)}, \tag{5.10}$$

with $\gamma, \gamma_i, \lambda_i \in \mathbb{C}$, $x_i \in \mathbb{R}$, and y_i either real or imaginary, while j is some number between 1 and $n - 1$. In particular, the poles are either in real pairs or complex conjugate pairs.

Furthermore, there is a possibility that some of the poles and zeros may cancel

in (5.9) and (5.10), and as a result some of these poles and zeros could be fictitious (see proof of Theorem 10 later where this becomes important).

For PQLSs such a cascade realisation is always possible [17, 74] and each single mode system is passive. We see an example of this.

Example 7. *Consider a SISO PQLS* (C, Ω) *and let* $z_1, z_2, \ldots, z_m$ *be the eigenvalues of* $A = -i\Omega - \frac{1}{2}C^\dagger C$*. Then the transfer function is given by*

$$\begin{aligned}\Xi(s) &= \frac{\mathrm{Det}(s - A^\#)}{\mathrm{Det}(s - A)} \\ &= \frac{s - \overline{z}_1}{s - z_1} \times \frac{s - \overline{z}_2}{s - z_2} \times \ldots \times \frac{s - \overline{z}_m}{s - z_m}.\end{aligned}$$

Now, comparing each term in the product with the transfer function of a SISO system of one mode, i.e.,

$$\Xi(s) = \frac{s + i\Omega - \frac{1}{2}|c|^2}{s + i\Omega + \frac{1}{2}|c|^2},$$

it is clear that each represents the transfer function of a bona-fide PQLS with Hamiltonian and coupling parameters given by $\Omega_i = -\mathrm{Im}(z_i)$ *and* $1/2|c_i|^2 = -\mathrm{Re}(z_i)$*. This realisation of the transfer function is a cascade of optical cavities. Furthermore, we note that the order of the elements in the series product is irrelevant; in fact a differing order can be achieved by a change of basis on the system space.*

In actual fact this example enables us to find a system realisation directly from the transfer function for SISO PQLSs, thus offering a parallel strategy to the realisation method in [5]. We will see in the next subsection that a similar brute-force approach for finding a cascade realisation of a geneic SISO active QLS is also possible.

5.3 Identification Method 1: Direct Method (SISO Systems)

Suppose that we have constructed the transfer function from the input-output data, using for instance one of the techniques of [38][1]. Here we outline one system identification method, which gives a cascaded system realisation of the transfer function, and is possible for all generic[2] minimal SISO QLSs.

The work outstanding here is to identify $x_i, \Omega_{i-}, y_i, \theta_i, \phi_i$ in (5.7) (5.8) from the expressions for $\Xi_-(s)$ and $\Xi_+(s)$ [(5.9) and (5.10)]. We use a brute-force algorithm to do this, which goes as follows:

(1) Consider a bipartition of the system as $1|n-1$ and identify the parameters of the first system (see Fig. 5.1).

(2) Since the transfer function is $\flat$-unitary, divide through to obtain an $n-1$-mode transfer function and repeat the procedure with the remaining $n-1$ modes until one mode is left.

(3) Identify the one remaining mode.

Let us now explain in more detail step (1) of the algorithm (steps (2) and (3) are self-explanatory). We shall assume for simplicity that none of the poles of the transfer function lie on the real axis, i.e. they are in complex conjugate pairs.

Firstly, since the transfer function is known, therefore the locations of all poles and zeros of $\Xi_-(s)$ and $\Xi_+(s)$ are too. Note that the transfer function has up to $2n$ poles. However, without loss of generality we may assume that there are exactly $2n$. Moreover, we may assume that we also have the full list of zeros in (5.9) and (5.10). Indeed, since all poles are in the left complex plane and the zeros appear in pairs, $\pm z$, then if there is a zero at z in the right-plane but no zero at $-z$ then there must have been a pole-zero cancellation at $-z$. Therefore we can identify any "missing" poles or zeros.

[1] Typically this can be done by probing the system with a known input (e.g a coherent state with a time-dependent amplitude) and performing a measurement (e.g homodyne or heterodyne measurement) on the output field and post-processing the data (e.g using maximum likelihood or some other classical method [38].

[2] The QLS is generic in the sense that the cascade exists (see Sec. 5.2)

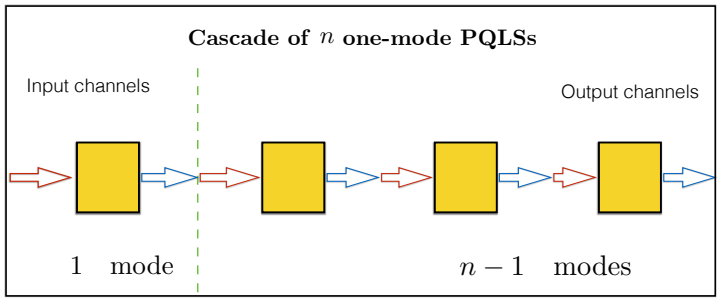

FIGURE 5.1

Now write $\Xi_-(s)$ and $\Xi_+(s)$ as

$$\Xi_-(s) = \Xi_-^{(n-1)}(s)\Xi_{1-}(s) + \Xi_+^{(n-1)}(s)\overline{\Xi_{1+}(s^*)}, \tag{5.11}$$

$$\Xi_+(s) = \Xi_-^{(n-1)}(s)\Xi_{1+}(s) + \Xi_+^{(n-1)}(s)\overline{\Xi_{1-}(s^*)}, \tag{5.12}$$

with

$$\Xi_-^{(n-1)}(s) = \frac{s^{2(n-1)} + a_{n-2}s^{2(n-2)} + \ldots + a_1 s^{2(1)} + a_0}{\prod_{i=2}^{n}(s + x_i + y_i)(s + x_i - y_i)},$$

$$\Xi_+^{(n-1)}(s) = \frac{b_{n-2}s^{2(n-2)} + b_{n-3}s^{2(n-3)} + \ldots + b_1 s^{2(1)} + b_0}{\prod_{i=2}^{n}(s + x_i + y_i)(s + x_i - y_i)},$$

$$\Xi_{1-}(s) = \frac{s^2 + e}{(s + x_1 + y_1)(s + x_1 - y_1)},$$

$$\Xi_{1+}(s) = \frac{f}{(s + x_n + y_n)(s + x_n - y_n)},$$

where $e = -x_1^2 - y_1^2 + 2ix_1\theta_1$ and $f = -2ix_1\Omega_{1+}$ (see Sec. 5.2).

For step (1) of the algorithm choose a pair of complex conjugate poles, which must belong to one of the systems in the cascade. We can take this system to be the one system in the partition, i.e., $\Xi_1(s)$. As alluded to above, let us identify this system in the cascade.

Firstly, we can identify the quantities x_1, y_1 from the poles. It is clear at this stage that it remains to identify θ_1, Ω_{1+}. Note that we already know the value of

$|\Omega_{1+}|^2 - \theta_1^2$, which is y_1^2.

Now from the numerators of (5.11) and (5.12) we can identify the following: From (5.11):

$$
\begin{aligned}
&s^0 : a_0 e + b_0 \overline{f} =: \alpha_0 \\
&s^2 : a_1 e + b_1 \overline{f} + a_0 =: \alpha_1 \\
&\vdots \\
&s^{2(n-2)} : a_{n-2} e + b_{n-2} \overline{f} + a_{n-3} =: \alpha_{n-2} \\
&s^{2(n-1)} : 1 \cdot e + a_{n-2} =: \alpha_{n-1}
\end{aligned}
$$

From (5.12):

$$
\begin{aligned}
&s^0 : a_0 f + b_0 \overline{e} =: \beta_0 \\
&s^2 : a_1 f + b_1 \overline{e} + b_0 =: \beta_1 \\
&\vdots \\
&s^{2(n-2)} : a_{n-2} f + b_{n-2} \overline{e} + b_{n-3} =: \beta_{n-2} \\
&s^{2(n-1)} : 1 \cdot f + b_{n-2} =: \beta_{n-1}.
\end{aligned}
$$

We now work recursively in decreasing powers of s to obtain expressions for a_i and b_i (for $i = n-2, ..., 0$). We see that at each stage of the recursion the expression we obtain is written in terms of known quantities and is linear in the two unknowns θ_1, Ω_{1+}. Clearly, this is true for a_{n-2} and b_{n-2}. That is, take the $s^{2(n-1)}$ equations:

$$a_{n-2} = \alpha_{n-1} - e$$

$$b_{n-2} = \beta_{n-1} - f$$

and observe that e, f are linear in θ_1, ϕ_1. To see that this is true for all a_i b_i, we proceed by induction. Suppose that after the $k-1$ step we have expressions for a_{n-k} and b_{n-k} that are linear in θ_1, ϕ_1 and are of the form:

$$a_{n-k} = s_1 + s_2 \overline{\Omega_{1+}} - s_3 \theta_1$$

$$b_{n-k} = s_4 - s_2\theta_1 + s_3\Omega_{1+},$$

where the s_i are known quantities. Note that it shouldn't be too hard to see that a_{n-2}, b_{n-2} were also of this form. We will now show that $a_{n-(k+1)}$ is of this form (the proof for $b_{n-(k+1)}$ is similar).

$$\begin{aligned} a_{n-(k+1)} &= \alpha_{n-k} - a_{n-k}e - b_{n-k}\overline{f} \\ &= \alpha_{n-k} - \left(s_1 + s_2\overline{\Omega_{1+}} - s_3\theta_1\right)\left(-x_1^2 - y_1^2 + 2ix_1\theta_1\right) - \left(s_4 - s_2\theta_1 + s_3\Omega_{1+}\right)\left(2ix_1\overline{\Omega_{1+}}\right) \\ &= \tilde{s}_1 + \tilde{s}_2\overline{\Omega_{1+}} - \tilde{s}_3\theta_1, \end{aligned}$$

where

$$\tilde{s_1} := \alpha_{n-k} + s_1(x_1^2 + y_1^2) + 2is_3x_1(\theta^2 + |\Omega_{1+}|^2)$$

$$\tilde{s_2} := s_2(x_1^2 + y_1^2) - 2is_4x_1$$

$$\tilde{s_3} := -s_3(x_1^2 + y_1^2) - 2ix_1s_1.$$

Therefore $\tilde{s}_i$ are known, so we are done.

Finally take the expressions for a_0 and b_0 that we have just obtained and substitute them into the two remaining equations coming from the s^0 powers. The result of this is again two linear equations in θ_1, Ω_{1+}. A consequence of the fact we obtain linear expressions at each stage is that the final solution will be unique. This uniqueness should not be surprising because of the constraints that we placed on the realisation in Sec. 5.2, i.e., that each element of the equivalence class contains exactly one element.

Example 8. *We now give an example of the above procedure. Suppose that we have the following two-mode SISO QLS:*

$$C_- = (8, 12)\,,\ \ C_+ = (0, -1)\,,\ \ \Omega_- = \begin{pmatrix} 6 & -1 \\ -1 & 2 \end{pmatrix} \ \text{ and } \ \Omega_+ = \begin{pmatrix} 0 & i \\ i & 0 \end{pmatrix}.$$

Its transfer function is given by

$$\Xi_-(s) = \frac{s^4 + (-10672.25 + 482)s^2 + (338313 - 12284i)}{s^4 + 207s^3 + 10752.25s^2 + 6940s + 338505} \tag{5.13}$$

$$\Xi_+(s) = \frac{(-192 + 32i)s^2 + (-4276 + 1632i)}{s^4 + 207s^3 + 10752.25s^2 + 6940s + 338505}. \tag{5.14}$$

We will now find a cascade realisation directly from the transfer function using the above procedure. Firstly, the poles of the transfer function are given by $-103.48 - 2.12i, -103.48 + 2.12i$ *and* $-0.0187 + 5.62i, -0.0187 - 5.62i$*. Let us identify the poles* $-103.48 - 2.12i, -103.48 + 2.12i$ *as belonging to the first system. Using* $x_1 = \frac{1}{2}c_1^2$ *and the recursive procedure above, we obtain* $c_1 = 14.39, \Omega_{1-} = 2.33$ *and* $\Omega_{1+} = -0.15 - 0.93i$*. Finally, we may identify the second system by* $\Xi_2(s) = \Xi(s)\Xi_1(s)^\flat$*, so that* $c_2 = 0.2, \Omega_{2-} = 7.38$ *and* $\Omega_{2+} = -1.48 - 4.55i$*.*

On the other hand we may identify the poles $-0.0187 + 5.62i, -0.0187 - 5.62i$ *as the first system and* $-103.48 - 2.12i, -103.48 + 2.12i$ *as the second system. As a result we obtain* $c_1 = 0.2, \Omega_{1-} = 7.30, \Omega_{1+} = 1.61 - 4.37i$ *and* $c_2 = 14.39\Omega_{2-} = 2.33, \Omega_{2+} = -0.15 - 0.93i$*. This degeneracy corresponds corresponds to the (symplectic) Schur decomposition degeneracy mentioned above. Notice that the subsystems in both constructions are different, which is a signature of the fact that the subsystems in each don't commute.*

The brute-force approach in this section gets too cumbersome for MIMO systems so we need an alternative method, which is the subject of the next subsection.

5.4 Identification Method 2: Indirect Method

Here, the realisation is obtained indirectly by first finding a non-physical realisation and then constructing a physical one from this by applying a criterion developed in [17]. The construction follows similar lines to the method described in [5, 78] for PQLSs.

Let (A_0, B_0, C_0) be a triple of doubled-up matrices which constitute a minimal realisation of $\Xi(s)$, i.e.

$$\Xi(s) = 1 + C_0(sI - A_0)^{-1}B_0. \tag{5.15}$$

The identification method here is applicable to generic (not necessarily SISO) QLSs, provided such a classical realisation can be found beforehand. For example, in Appendix A such a classical realisation is found for an n-mode minimal QLS, with matrices (A, C), possessing $2n$ distinct poles each with non-zero imaginary part.

Any other minimal realisation of the transfer function can be generated via a **similarity** transformation:

$$A = TA_0T^{-1} \;\; B = TB_0 \;\; C = C_0T^{-1}. \tag{5.16}$$

The problem here is that in general these matrices may not describe a genuine quantum system in the sense that from a given A, B, C one cannot reconstruct the pair (Ω, C). Our goal is to find a special transformation T mapping (A_0, B_0, C_0) to a triple (A, B, C) that does represent a genuine quantum system. To this end, a triple (A, B, C) corresponds to a quantum linear system if and only if it satisfies the *physical realisability conditions* [17]:

$$A + A^\flat + C^\flat C = 0 \;\text{ and }\; B = -C^\flat. \tag{5.17}$$

Therefore, substituting (5.16) into the left equation of (5.17) one finds

$$\left(T^\dagger JT\right) A_0 + A_0^\dagger \left(T^\dagger JT\right) + C_0^\dagger JC_0 = 0, \tag{5.18}$$

where the matrices J here are of appropriate dimensions. The goal here is to find a T satisfying (5.18), for then the triple (A, B, C) obtained via (5.16) will be a minimal QLS realisation of the transfer function.

Next, because A and A_0 are similar and the system is assumed to be stable, A_0 will have eigenvalues in the left-half plane. Hence it follows from [49, Lemma 3.18]

that (5.18) has a unique solution, given by

$$T^\flat T = J\left(T^\dagger J T\right) = \int_0^\infty J\left(C_0 e^{A_0 t}\right)^\dagger J\left(C_0 e^{A_0 t}\right) dt. \tag{5.19}$$

We now need to use a result from [16], which is a sort of singular value decomposition for symplectic matrices. We state the result in a slightly different way here.

Lemma 2. *Let $N^{2n\times 2n}$ be a complex, invertible, doubled-up matrix and let $\mathcal{N} = N^\flat N$.*

(1) Assume that all eigenvalues of $\mathcal{N}$ are semisimple. Then there exists a symplectic matrix W such that $\mathcal{N} = W\hat{N}W^\flat$ where $\hat{N} = \begin{pmatrix} \hat{N}_1 & \hat{N}_2 \\ \hat{N}_2^\# & \hat{N}_1^\# \end{pmatrix}$ with

$$\hat{N}_1 = \mathrm{Diag}\left(\lambda_1^+, ..., \lambda_{r_1}^+, \lambda_1^-, ..., \lambda_{r_2}^-, \mu_1 1_2, ..., \mu_{r_3} 1_2\right)$$

$$\hat{N}_2 = \mathrm{Diag}\left(0, ..., 0, 0, ..., 0, -\nu_1\sigma, ..., -\nu_{r_3}\sigma\right).$$

Here $\lambda_i^+ > 0$, $\lambda_i^- < 0$ and $\lambda_i^c := \mu_i + i\nu_i$ (with $\mu_i, \nu_i \in \mathbb{R}$ $\nu_i > 0$) are the eigenvalues of $\mathcal{N}$. The matrix $\sigma = \left(\begin{smallmatrix} 0 & -i \\ i & 0 \end{smallmatrix}\right)$ is one of the Pauli matrices.

(2) There exists another symplectic matrix V such that $N = V\bar{N}W^\flat$ where $\bar{N}$ is the factorization of $\hat{N}$ $\left(\hat{N} = \bar{N}^\flat \bar{N}\right)$ given by $\bar{N} = \begin{pmatrix} \bar{N}_1 & \bar{N}_2 \\ \bar{N}_2^\# & \bar{N}_1^\# \end{pmatrix}$ with

$$\bar{N}_1 = \mathrm{Diag}\left(\sqrt{\lambda_1^+}, ..., \sqrt{\lambda_{r_1}^+}, 0, ..., 0, \alpha_1 1_2, ..., \alpha_{r_3} 1_2\right)$$

$$\hat{N}_2 = \mathrm{Diag}\left(0, ..., 0, \sqrt{|\lambda_1^-|}, ..., \sqrt{|\lambda_{r_2}^-|}, -\beta_1\sigma, ..., -\beta_{r_3}\sigma\right).$$

The coefficients α_i and β_i are determined from μ_i and ν_i via

- *If $\mu_i \geq 0$, then $\alpha_i = \sqrt{\mu_i}\cosh x_i$, $\beta_i = \sqrt{\mu_i}\sinh x_i$, with $x_i = \frac{1}{2}\sinh^{-1}\frac{\nu}{\mu}$.*
- *If $\mu_i \leq 0$, then $\alpha_i = \sqrt{|\mu_i|}\sinh x_i$, $\beta_i = \sqrt{|\mu_i|}\cosh x_i$, with $x_i = \frac{1}{2}\sinh^{-1}\frac{\nu}{|\mu|}$.*
- *If $\mu_i = 0$, then $\alpha_i = \beta_i = \sqrt{\frac{\nu_i}{2}}$.*

The Lemma can be extended beyond the semisimple assumption, but since the latter holds for generic matrices [16], it suffices for our purposes.

We can therefore use Lemma 2 together with equation (5.19) in order to write the 'physical' T as $T = V\bar{T}W^\flat$, where W and $\bar{T}$ can be computed as in the Lemma above, and V is a symplectic matrix. However, since the QLS equivalence classes are characterised by symplectic transformation, this means that $T_0 = \bar{T}W^\flat$ transforms (A_0, B_0, C_0) to the matrices of a quantum systems satisfying the realisability conditions. Finally, we can solve to find the set of physical parameters (Ω, C), which are given in terms of (A_0, B_0, C_0), as

$$\begin{aligned} C &= C_0 W \bar{T}^{-1} \\ \Omega &= i\left(\bar{T}W^\flat A_0 W\bar{T}^{-1} + \frac{1}{2}\left(\bar{T}^\flat\right)^{-1} W^\flat C_0^\flat C_0 W\bar{T}^{-1}\right). \end{aligned}$$

Remark 3. *Note that by assumption $\Xi(s)$ is the transfer function of a QLS. Since the original triple (A_0, B_0, C_0) is minimal, this implies that there exists a non-singular T satisfying (5.19), so the right side of (5.19) is non-singular, which eventually leads to a non-singular transformation T computed using Lemma 2.*

5.5 Noisy Transfer Function Identification

We will now discuss the situation where there is noise in the system. Recall that the system in our QLSs model is an example of an open quantum system. In open quantum systems theory information is dissipated to the environment [92], which is typically modelled as (bosonic) quantum bath (see Sec. 3.2). Therefore noisy QLSs may be modelled with additional channels that we cannot access [13](see Fig. 5.2).

Throughout this section we shall work with **passive** QLSs.

5.5.1 Identifiability

Suppose that we have an unknown PQLS with n internal modes and m channels. We assume that we can only access m_1 of them. We call the m_1 channels that we can access the *accessible channels* and the remaining channels the *noise channels*. We would like to ask the following question: what is identifiable from measurements on the accessible channels? That is, we seek to identify the system $\mathcal{G} := (C = (c_1, c_2), \Omega)$

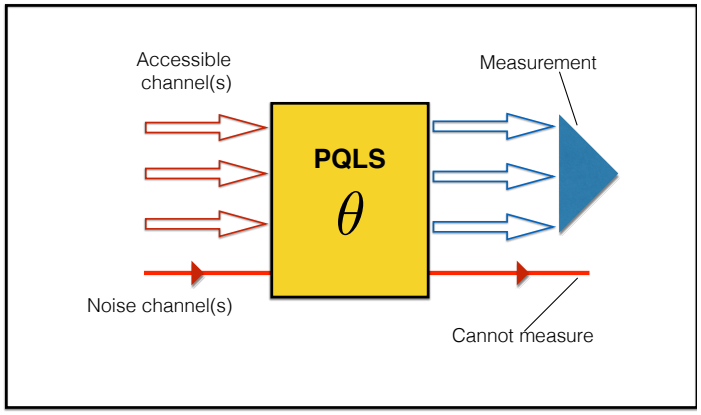

FIGURE 5.2: Illustration of how to model noise in QLSs.

where c_1 is supported on the accessible channels and c_2 on noise channels. Write the transfer function for $\mathcal{G}$ as

$$\Xi(s) = \begin{pmatrix} \Xi_{11}(s) & \Xi_{12}(s) \\ \Xi_{21}(s) & \Xi_{22}(s) \end{pmatrix},$$

where, for example, $\Xi_{12}(s)$ represents the transfer function from the accessible channels to the noise channels. We assume throughout Sec. 5.5.1 that the input on the noise channels is vacuum. Therefore, we have access to only the quantity $\Xi_{11}(s) = 1 - c_1 (s - A)^{-1} c_1^\dagger$ from the full transfer function $\Xi(s)$.

Under the assumption of minimality and because $\Xi_{11}(s)$ is a classical transfer function, then the worst case scenario is that we may identify (c_1, Ω) up to a similarity transformation. On the other hand, the best case to hope for is that we can identify (C, Ω) up to a unitary transformation as in Corollary 1. We give a simple example illustrating that the actual level of identifiability lies somewhere between these two extremes.

Example 9. *Suppose that we have a one-mode PQLS with two channels, of which we only have access to one. The full transfer function is given by*

$$\Xi(s) = \begin{pmatrix} 1 - \frac{|c_1|^2}{s + i\Omega + \frac{1}{2}(|c_1|^2 + |c_2|^2)} & \frac{c_1 \overline{c_2}}{s + i\Omega + \frac{1}{2}(|c_1|^2 + |c_2|^2)} \\ \frac{c_2 \overline{c_1}}{s + i\Omega + \frac{1}{2}(|c_1|^2 + |c_2|^2)} & 1 - \frac{|c_1|^2}{s + i\Omega + \frac{1}{2}(|c_1|^2 + |c_2|^2)} \end{pmatrix}.$$

Clearly from the full transfer function the most that we can hope to identify are the quantities $|c_1|, |c_2|\Omega$ and $c_1\overline{c_2}$. This corresponds exactly to the equivalence classes in

Corollary 1.

However, from just the top-left element of $\Xi(s)$ we an only identify $|c_1|, |c_2|$, and Ω. That is, we have no information about the relative phase of the coupling between the two channels; this should not be a surprise.

Also, restricting to accessible channels observability and controllability are not equivalent in general, unlike the noiseless case. We show give a counterexample for this.

Example 10. *Consider a two mode system SISO system with an additional noisy channel. Let $\Omega = \mathrm{Diag}(4, 1)$ and $c_1 = (2, y), c_2 = (-1, 3)$, where y is a variable to be specified later. Therefore,*

$$A = \begin{pmatrix} -4i-4 & 3-2y \\ 3-2\overline{y} & -i-|y|^2-9 \end{pmatrix}.$$

Using condition (2) in Theorem 2 the system (c_1, A) is observable iff the matrix

$$\begin{pmatrix} c_1 \\ c_1 A \end{pmatrix}$$

has full column rank. After some algebra it turn out that this condition is equivalent to

$$y^2 + y\left(-2i + \frac{16}{3}\right) - 12 = 0. \tag{5.20}$$

On the other hand, by using (2) from Theorem 1, $(c_1^\dagger, A)$ is controllable iff

$$y^2 + y\left(+2i + \frac{16}{3}\right) - 12 = 0. \tag{5.21}$$

The equations (5.20) and (5.21) cannot be satisfied simultaneously, hence we have counterexamples to the statements [observability $\Longrightarrow$ controllability] and [controllability $\Longrightarrow$ observability].

The previous two examples indicate that the identifiability problem for noisy systems is more complicated than the noiseless case. To recap, the following statements no longer hold:

- Observability $\Longleftrightarrow$ controllability.

- Minimal $\implies$ TFE PQLSs are related by a unitary transformation.

We will now understand what is identifiable in the noisy case.

First construct a minimal classical realisation for the transfer function, $\Xi_{11}(s)$, given by (A_0, B_0, C_0), by using (for instance) the Gilbert realisation method [49]. Here A_0 is of size $n \times n$, B_0 is of size $n \times m_1$ and C_0 is of size $m_1 \times n$. That is,

$$\Xi_{11}(s) = 1 + C_0 \left(s - A_0\right)^{-1} B_0.$$

Under assumption of minimality this realisation will be unique up to a similarity transformation (see Theorem 3).

Now we must find a pair of matrices $B_1 \in \mathbb{C}^{n\times(m-m_1)}$ and $C_1 \in \mathbb{C}^{(m-m_1)\times n}$ such that the extended system

$$\left(A_0, \left(\begin{smallmatrix} B_0 & B_1 \end{smallmatrix}\right), \left(\begin{smallmatrix} C_0 \\ C_1 \end{smallmatrix}\right), 1\right)$$

represents a physical quantum system. Note that there may be many such matrices B_1 and C_1; this would correspond to PQLSs with the same transfer function on the accessible channels but different transfer function on the extended space. Let us put this non-uniqueness issue to one side for the moment and proceed to find a realisation. Also note that the extended system (once found) is guaranteed to be minimal because (A_0, B_0, C_0) is. Now the requirement that the extended system be physical means that there exits a similarity transformation T such that the matrices

$$A := T A_0 T^{-1}, \quad B := T \left(\begin{smallmatrix} B_0 & B_1 \end{smallmatrix}\right) \quad C := \left(\begin{smallmatrix} C_0 \\ C_1 \end{smallmatrix}\right) T^{-1} \tag{5.22}$$

correspond to a genuine PQLS, i.e., (see Sec. 3.3 or [5])

$$A + A^\dagger + C^\dagger C = 0 \quad \text{and} \quad B = -C^\dagger. \tag{5.23}$$

Crucially such a similarity transformation preserves the transfer function $\Xi_{11}(s)$. It follows that

$$\left(T^\dagger T\right) A_0 + A_0^\dagger \left(T^\dagger T\right) + C_0^\dagger C_0 + C_1^\dagger C_1 = 0 \tag{5.24}$$

$$\left(T^\dagger T\right) (B_0, B_1) = -(C_0^\dagger, C_1^\dagger). \tag{5.25}$$

As A_0 is Hurwitz, Eq. (5.24) is equivalent to

$$T^\dagger T = \int_0^\infty e^{A_0^\dagger t}\left(C_0^\dagger C_0 + C_1^\dagger C_1\right) e^{A_0 t}. \tag{5.26}$$

Note that $T^\dagger T$ must be invertible for any choice of C_1 by minimality [49]. Finally, combining this expression with (5.25), one obtains

$$B_0 = -\left(\int_0^\infty e^{A_0^\dagger t}\left(C_0^\dagger C_0 + C_1^\dagger C_1\right) e^{A_0 t}\right)^{-1} C_0^\dagger \tag{5.27}$$

$$B_1 = -\left(\int_0^\infty e^{A_0^\dagger t}\left(C_0^\dagger C_0 + C_1^\dagger C_1\right) e^{A_0 t}\right)^{-1} C_1^\dagger. \tag{5.28}$$

In summary in order to find a physical realisation from (A, B, C) one begins by finding a C_1 (perhaps numerically) satisfying (5.27). The matrix B_1 is then fixed by the physicality condition (5.28). From these one can obtain a unique (given a particular solution B_1, C_1) $T^\dagger T$ from (5.26). As T is a normal matrix, we can diagonalise $T^\dagger T$, i.e. $T^\dagger T = U_0 \Lambda_0 U_0^\dagger$, so that $T = U_0^\dagger \sqrt{\Lambda_0}$. Finally, the physical system is given by (A, C) satisfying (5.22).

As mentioned earlier B_1 and C_1 are not unique here (although B_1 is fixed by C_1). This freedom appears in Eq. (5.27). However, given a particular solution B_1 and C_1 the matrix T is unique up to a unitary matrix in Corrolary 1, as the problem simply reduces to the noiseless case. Therefore, the non-uniqueness in the choice of C_1 represents the relaxation of the unitary equivalence classes from the noiseless to the noisy case. Moreover, the conditions (5.22) reduce to the classical similarity transformations on (A_0, B_0, C_0), whereas the condition that the full system be physical (i.e. (5.23)) imposes restrictions on the admissible similarity transformations. Therefore, identifiability does indeed lie somewhere between the similarity and unitary transformation extremes, as mentioned above.

Furthermore, there is no guarantee that the transfer function $\tilde{\Xi}(s)$ is equal to the original transfer function $\Xi(s)$. Moreover, as minimality on the extended space of channels m does not imply minimality on the channels m_1, the transfer function $\tilde{\Xi}(s)$ may be simpler than $\Xi(s)$ in the sense that less modes are required to describe

it.

We now give an example of this method in action.

Example 11. *Consider a one mode SISO system with an additional noisy channel. Suppose that the coupling is given by* $C_1 = 6i$, $C_2 = 3 + 2i$ *and the Hamiltonian is* $\Omega = 3$. *The question that we intend to answer is the following: can we recover these parameters from the part of the transfer function that we have access to, namely* $\Xi_{11}(s) = 1 - \frac{36}{s+3i+39/2}$*?*

Firstly, suppose that we obtain the classical realisation $(A_0 = -\frac{39}{2}, B_0 = -1, C_0 = 36)$ *for this transfer function, Now solving the integral in* (5.27) *leads to the condition* $1 = \frac{(39)(36)}{|\tilde{C}_0|^2+36^2}$. *Hence* $|\tilde{C}_0| = 6\sqrt{3}$. *From* (5.28) *we also obtain* $\tilde{B}_0 = -\frac{\overline{\tilde{C}_0}}{36}$. *As there are no further constraints on* $\tilde{B}_0$ *and* $\tilde{C}_0$, *we can take them to be real. Hence* $\tilde{C}_0 = 6\sqrt{3}$ *and* $\tilde{B}_0 = -\frac{\sqrt{3}}{6}$. *Therefore, from* (5.26) *one obtains* $\left(T^\dagger T\right) = \left(\begin{smallmatrix} 36 & 0 \\ 0 & 36 \end{smallmatrix}\right)$. *Hence* $T = \left(\begin{smallmatrix} 6 & 0 \\ 0 & 6 \end{smallmatrix}\right)$. *Finally, from these we can obtain the physical system* $C_1 = 6, C_2 = \sqrt{3}, \Omega = 3$. *One can verify that this realisation has noisy transfer function* $\Xi_{11}(s)$. *However, the transfer function of the extended system characterised by matrices* $C_1 = 6, C_2 = \sqrt{3}, \Omega = 3$ *is not the same as the full transfer function of the original system* $C_1 = 6i, C_2 = 3 + 2i, \Omega = 3$, *but nevertheless remains consistent with Example 9.*

Throughout this subsection we have implicitly assumed that we know the number of noise channels. In fact we may remove this assumption using the following observation: for a system with n modes, it is always possible to find $\tilde{B}_0$ and $\tilde{C}_0$ of size $n \times n$ satisfying the requirements above. This means that we can model our MIMO n mode system as having (at most) n noisy channels and a solution is guaranteed to exist; any additional channels will result in superfluous parameters. Therefore, we don't need to know m in our analysis above. To see why this statement is true, suppose as above that we have an n mode system with m_1 accessible channels and $m - m_1 > n$ noise channels, which can be written as a cascade of one-mode systems [75]. Suppose that the cascaded system is given by

$$\left(\left(\begin{smallmatrix} c_{1n} \\ c_{2n} \end{smallmatrix}\right), \Omega_n\right) \lhd \ldots \lhd \left(\left(\begin{smallmatrix} c_{11} \\ c_{21} \end{smallmatrix}\right), \Omega_1\right).$$

Now we can change basis on the noise fields $1, \ldots. m - m_1$ (hence the accessible field remains unchanged) so that the noisy coupling to the first mode in the cascade is

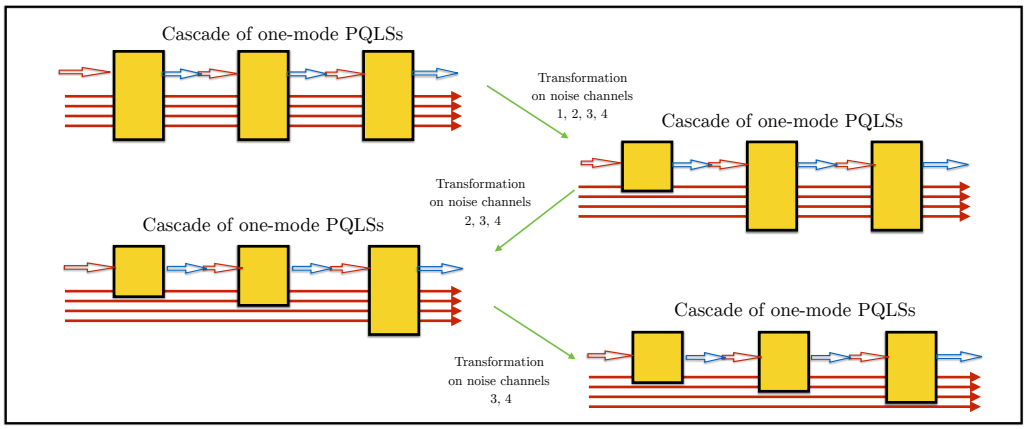

FIGURE 5.3

supported on only the first noisy channel. Next perform a change of basis on the noise fields $2, ...m - m_1$ so that the noisy coupling to the second mode in the cascade is supported on only the first two noisy channels. Repeat this procedure a further $n-2$ times leads to an accessible channel TFE system which couples with only n noise channels (there will be $m - m_1 - n$ redundant noise channels) (see Fig. 5.3).

5.5.2 Noise Unobservable Subspaces

Here we consider a modified problem to the one in the last subsection, where we suppose that we also have access to the quantity $\Xi_{m_1,m-m_1}(s)$. This could be achieved for example under the assumption that the input on the noise channel is known (and is different from vacuum). The question of identifiability comes down to understanding what is identifiable from $\Xi_{m_1,m_1}(s)$ and $\Xi_{m_1,m-m_1}(s)$, and can be answered in a similar way to the problem in Sec. 5.5.1. However, this problem is not our primary concern here. Instead we discuss an interesting phenomenon when part of the system is not visible in the noise output.

Suppose that we have the PQLS $\mathcal{G} := (C = (c_1, c_2), \Omega)$ where c_1 is supported on the first m_1 channels and c_2 on the remaining $m - m_1$ channels. The transfer function that we can access is given by

$$\Xi_{acc}(s) := (1,0) - c_1 (s - A)^{-1} \left(c_1^\dagger, c_2^\dagger\right),$$

whereas the transfer function on the noisy output is given by

$$\Xi_{noi}(s) := (0,1) - c_2 (s - A)^{-1} \left(c_1^\dagger, c_2^\dagger\right).$$

Note that the "(A, B, C, D) forms" for the accessible and noisy channels are given by $\left(A, -\left(c_1^\dagger, c_2^\dagger\right), c_1, 1\right)$ and $\left(A, -\left(c_1^\dagger, c_2^\dagger\right), c_2, 1\right)$, respectively.

Definition 9. *We say that a PQLS is observable or controllable on the accessible (noisy) channel if the system is observable or controllable, respectively, when restricted to the accessible (noisy) channel.*

Theorem 6. *Suppose that a PQLS is observable on the accessible (noisy) channel, then it is controllable on the accessible (noisy) channel.*

Proof. Suppose that the system is observable on the accessible channel. By Theorem 2 this is equivalent to the statement: if y is a (right) eigenvector of A with eigenvalue λ then $c_1 y \neq 0$. We need to show that $\left(A, -\left(c_1^\dagger, c_2^\dagger\right)\right)$ is controllable, or equivalently $\left(A^\dagger, (c_1, c_2)\right)$ is observable. Suppose for a contradiction that $\left(A^\dagger, (c_1, c_2)\right)$ is not observable. Therefore there exists a (right)-eigenvector, z, of $A^\dagger$ with eigenvalue μ such that $c_1 z = 0$ and $c_2 z = 0$. Using these conditions we have

$$\begin{aligned}
\mu z &= A^\dagger z \\
&= -\left(A + c_1^\dagger c_1 + c_2^\dagger c_2\right) \\
&= -Az
\end{aligned}$$

However, controllability would imply that $c_1 z \neq 0$, which is a contradiction. The proof of the statement on the noisy channel can be obtained in a similar way. □

Note that the reverse direction in this theorem is not necessarily true and is a fact we look to exploit in the following.

Definition 10. *We say that a subspace of a PQLS is noise unobservable if it is unobservable from the noise channel. That is, there exists a series of (left)-eigenvectors of A, denoted by $y_1, ...y_k$, such that $c_2 y_i = 0$ for all i. The noise unobservable subspace (NUS) is given by Span$\{y_1, ...y_n\}$.*

The motivation behind the definition of a NUS is that there will be modes that are not visible from the noise output channel. However, these modes may still be controllable from the noise input. Note that the there are similarities between our definition of an NUS and that of a *protected subspace* in [93], in the sense that information flows from this subspace to the accessible channel(s) without loss to the noise channel(s). However, our emphasis here is on identification, rather than information flow, and their setup is also different to ours.

We have the following result, which says that the NUS can be identified as in the noiseless case (see Theorem 5).

Theorem 7. *Suppose that we have a PQLS* $\left(A, -\left(c_1^\dagger, c_2^\dagger\right), \left(\begin{smallmatrix} c_1 \\ c_2 \end{smallmatrix}\right), 1\right)$*, where:*

- *The accessible system,* $\left(A, -\left(c_1^\dagger, c_2^\dagger\right), c_1, 1\right)$*, is observable (hence minimal)*
- *The PQLS has a NUS.*

Then on the NUS the transfer function equivalent systems (TFEs) are related by a unitary transformation, as in Theorem 5.

Proof. Suppose that $\left(A, -\left(c_1^\dagger, c_2^\dagger\right), c_1, 1\right)$ and $\left(A', -\left(c_1'^\dagger, c_2'^\dagger\right), c_1', 1\right)$ are minimal and have the same transfer function $\Xi_{acc}(s)$. Therefore, they must be related via

$$A' = UAU^{-1} \quad \left(c_1'^\dagger, c_2'^\dagger\right) = \left(Uc_1'^\dagger, Uc_2'^\dagger\right) \quad c_1' = c_1U^{-1} \tag{5.29}$$

for some invertible matrix U (see Theorem 2.7). Now, using a similar technique as in the proof of Theorem 5 it is easy to show from these conditions that $c_1 = c_1U^\dagger U$. We also have

$$\begin{aligned} A' &= -A'^\dagger - c_1'^\dagger c_1' - c_2'^\dagger c_2' \\ &= -\left(U^\dagger\right)^{-1} A^\dagger U^\dagger - Uc_1^\dagger c_1 U^\dagger - c_2'^\dagger c_2' \\ &= \left(U^\dagger\right)^{-1} AU^\dagger + \left(U^\dagger\right)^{-1} c_1^\dagger c_1 U^\dagger + \left(U^\dagger\right)^{-1} c_2^\dagger c_2 U^\dagger - Uc_1^\dagger c_1 U^\dagger - c_2'^\dagger c_2' \\ &= \left(U^\dagger\right)^{-1} AU^\dagger + \left(U^\dagger\right)^{-1} c_2^\dagger c_2' - c_2'^\dagger c_2', \end{aligned} \tag{5.30}$$

where we have used the conditions (5.29) as well as the physical realisation conditions (Eq. (3.15)). Under the assumption that $\left(A', -\left(c_1'^\dagger, c_2'^\dagger\right), c_1', 1\right)$ has a NUS, then

(5.30) implies that

$$A'y = \left(U^\dagger\right)^{-1} AU^\dagger y \tag{5.31}$$

for all vectors y in the NUS. Combining (5.31) with $c_1 = c_1 U^\dagger U$, it follows that

$$c_1 AU^{-1}y = c_1 AU^\dagger y. \tag{5.32}$$

It is not too difficult to show that this condition may be extended to

$$c_1 A^k U^{-1}y = c_1 A^k U^\dagger y \tag{5.33}$$

for all $k = 0, 1, 2, \ldots$. Therefore, by observability we have that $U^\dagger y = U^{-1}y$. Hence on the NUS the equivalence class of systems (5.29) are related by a unitary transformation, as in Theorem 5. □

We have seen in the previous subsection how noise decreases identifiability. In quantum mechanics, the inclusion of noise in models also has a detrimental effect on many other problems, for example metrology [6] or control [7]. In some cases this can be catastrophic, for example the use of N00N states in quantum metrology has the effect of destroying the enhanced level of Heisenberg scaling. Therefore, the fact that part of the system can be identified as if there is no noise present is very interesting. It can also be shown that an identical result holds for general QLSs.

A consequence of this theorem, which was apparent from the proof but not written in the theorem, is that if one system, $\left(A, -\left(c_1^\dagger, c_2^\dagger\right), c_1, 1\right)$, has a NUS and $\left(A', -\left(c_1'^\dagger, c_2'^\dagger\right), c_1', 1\right)$ has the same transfer function then this second system must also have a NUS.

If a NUS is also uncontrollable with respect to the noise channel, then it becomes a *decoherence-free subsystem* (DFS) [93, 94]. A DFS is a subsystem of the QLS that is completely isolated from the noise; that is whose variables are not affected by the input and do not appear in the output. To see this observe that the transfer function

of the combined accessible and noise outputs is in this case given by:

$$\Xi(s) = 1 - \left(\begin{smallmatrix} c_1 \\ c_2 \end{smallmatrix}\right)(s - A)^{-1}\left(c_1^\dagger, c_2^\dagger\right) \tag{5.34}$$

$$= 1 - \left(\begin{smallmatrix} c_1 \\ c_2 \end{smallmatrix}\right)\sum_i \frac{R_i L_i}{(s - \lambda_i)}\left(c_1^\dagger, c_2^\dagger\right), \tag{5.35}$$

where L_i, R_i, λ_i are the left eigenvectors, right eigenvectors and eigenvalues of A. Therefore if there is an unobservable-uncontrollable noise mode then $c_2 R_i = 0$ and $L_i c_2^\dagger = 0$ for some i and so only the $(1,1)$ block of the transfer function has a contribution on that mode. This subsystem is clearly completely identifiable in this case (in the sense of Corollary 1) from the accessible output. DFSs are trivially NUSs, but interestingly Theorem 7 says that all NUSs (beyond the trivial case of DFSs) are completely identifiable. We revisit DFSs later in Ch. 8.

5.6 Summary and Outlook

In summary we have addressed the system identification problem and characterised all QLSs with the same transfer function. Such equivalent systems are related by a symplectic transformation on the space of modes. Therefore we have extended the result of [5] beyond the class of passive systems. We then outlined two methods to construct a (minimal and physical) realization of the system from the transfer function.

We also considered these same problems in the context of noisy QLSs, which are modelled with the use of additional inaccessible channels. We have investigated the notion of *noise unobservable subspaces*, where part of the system is shielded from the noise. Interestingly, we found that such a subsystem can be identified as in the noiseless case. An interesting topic of research is to understand more about noise unobservable subsystems and how far reaching their applications could be.

Finally, given that we now understand what is identifiable, the next step is to understand how well parameters can be estimated. This will be the subject of Chs. 7 and 8.

Chapter 6

Power Spectrum Identification

In the previous chapter we addressed system identification problem from a *time-dependent* input perspective. We are now going to change viewpoint and consider a setting where the input fields are *time-stationary* pure[1] Gaussian states as in Sec. 3.7.2. The output is uniquely defined by its power spectrum (3.22). The power spectrum identifiability is a natural and relevant setting in the quantum context, as it is in the classical one, where it was treated in the references [47, 48]. This setup is relevant when it may not be possible for the experimenter to use time-dependent inputs, e.g. when identification is performed in conjunction with control.

Our aim is to answer the same identifiability questions as those outlined in the time-dependent setting for this setting. That is:

(1) Which parameters can be identified by measuring the output for a given input covariance matrix $V(N, M) =: V$ (see Eq. (3.21))?

(2) How can we construct a system realisation from sufficient input-output data?

Notice that unlike the time-dependent case there is an explicit dependence on the input. The characterisation of the equivalence classes in the first question boils down to finding which systems have the same *power spectrum*, a problem which is well understood in the classical setting [47] but has not been addressed in the quantum domain. If two QLSs have the same power spectrum, then we call them *power spectrum equivalent* (PSE). Moreover, since the power spectrum depends on the system parameters via the transfer function, it is clear that one can identify

[1] The purity of the input state should be understood as that defined in Sec. 3.7.2

'at most as much as' in the time-dependent setting discussed in Sec. 5. In other words the corresponding equivalence classes are at least as large as those described by symplectic transformations (5.1). However, recall that in the analogous classical problem it was generally not possible to reconstruct the transfer function from the power spectrum uniquely (see Sec. 2.4.2) even under global minimality [47, 48, 50], which requires one to reconstruct the transfer function with the smallest dimension.

Consider the system's stationary state and note that it can be uniquely written as a tensor product between a pure and a mixed Gaussian state (see Sec. 3.1). We see in Sec. 6.1 that by restricting the system to the mixed component leaves the power spectrum unchanged. Furthermore, the pure component is passive, which ties in with previous results of [32]. Conversely, if the stationary state is fully mixed, there exists no smaller dimensional system with the same power spectrum. Such systems will be called globally minimal, and can be seen as the analogue of minimal systems for the stationary setting.

The main result of this chapter is to show that under global minimality the power spectrum determines the transfer function, and therefore the equivalence classes are the same as those in the transfer function (i.e Theorem 5). We give three proofs for this. The first is given in Sec. 6.3 for a generic class of SISO QLSs and is obtained by using a brute force argument to identify the poles and zeros of the transfer function from those of the power spectrum. The second proof, given in Sec. 6.4, holds for general QLSs and the key there is in reducing the power spectrum identifiability problem to an equivalent transfer function identifiability problem. Both of these methods use tools from classical systems theory. Our final method in Sec. 6.11 is a purely quantum one. In particular, we use the observation that unidentifiable directions will have zero QFI rate (infinitesimal) directions in the parameter space with the same power spectrum. We also give an identification method in Sec. 6.5 to reconstruct a system realisation of the power spectrum and discuss an example in Sec. 6.6.

In Sec. 6.8 we restrict our attention to PQLSs (with non-vacuum inputs). In particular, the identifiability problems turn out to have a much simpler solution for SISO PQLSs (Sec. 6.8.1). We investigate global minimality in more detail and understand which systems are globally minimal for both SISO and MIMO PQLSs.

We also see in Sec. 6.9 we show that by using additional ancillary channels with an appropriately chosen entangled input ensures that one can identify the transfer function from the power spectrum for all **minimal** systems. The key point is that we are changing the input, which matters for the power spectrum, in order to create a globally minimal system-input pair that is identifiable.

All of these identifiability problems have been discussed for **pure** inputs only. Finally, in Sec. 6.10 we extend the identifiability results to thermal inputs, which are an interesting class of mixed inputs.

6.1 Global Minimality

We now formally introduce the definition of global minimality, which is analogous to the classical definition (see Definition 5).

Definition 11. *A system (S, C, Ω) is globally minimal for (pure) input covariance, V, if there exists no lower dimensional system with the same power spectrum, Ψ_V.*

To see why this definition important, consider for example a passive system with vacuum input. In this case the power spectrum will be vacuum, which is the same as that of a zero-dimensional system.

In fact, we can assume without loss of generality that the input is vacuum, i.e., $V = \left(\begin{smallmatrix} 1 & 0 \\ 0 & 0 \end{smallmatrix}\right) =: V_{\text{vac}}$. Essentially, as the input is known (i.e the choice of the experimenter) and pure, we can change the basis of the field so that the input is vacuum and the system and output covariance (power spectrum) are modified as $\left(\tilde{S}, \tilde{C}, \tilde{\Omega}\right) := \left(S_{\text{in}}^{\flat} S S_{\text{in}}, S_{\text{in}}^{\flat} C, \Omega\right)$ and $\tilde{\Psi}(s) = S_{\text{in}}^{\flat} \Psi(s) \left(S_{\text{in}}^{\dagger}\right)^{\flat}$, respectively (recall the definition of $\flat$-adjoint from the Nomenclature). Here S_{in} is given by Eq. (3.4) in Sec. (3.1).

The stationary state of the system is characterised by it's covariance matrix, P, which from (3.12) is the unique solution of the *Lyapunov equation* [1]

$$AP + PA^{\dagger} + C^{\flat} V_{\text{vac}} (C^{\flat})^{\dagger} = 0. \tag{6.1}$$

The following theorem links global minimality with the purity of the stationary state of the system.

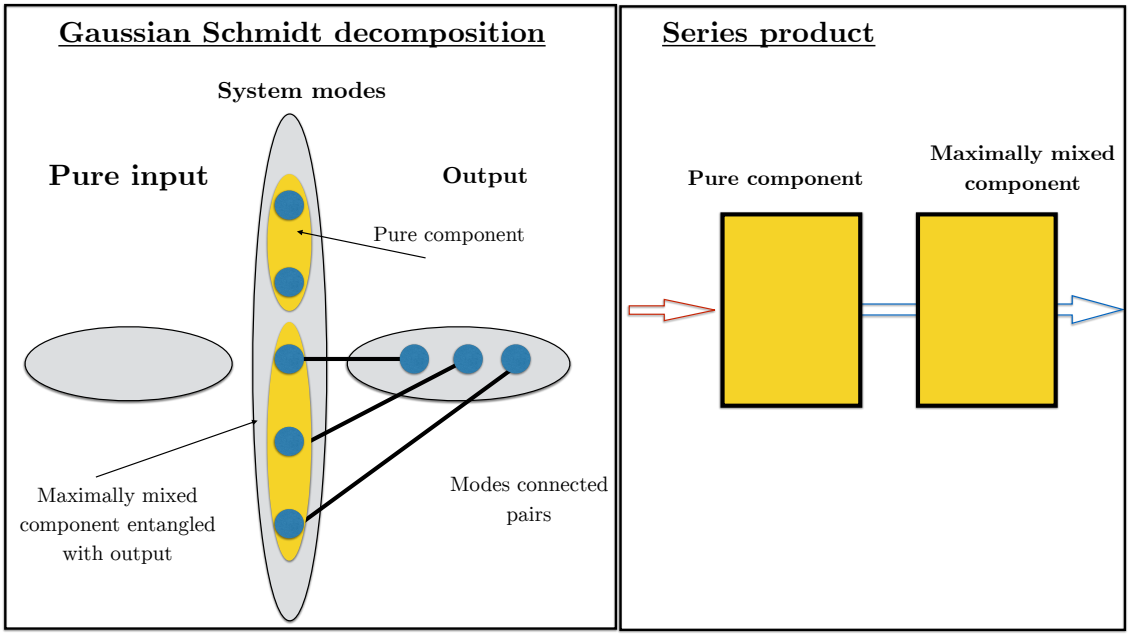

FIGURE 6.1: Pure and maximally mixed components connected in series.

Theorem 8. *Let $\mathcal{G} := (S, C, \Omega)$ be a minimal QLS with pure input V_{vac}.*

1. The system is globally minimal if and only if the (Gaussian) stationary state with covariance P satisfying the Lyapunov equation (6.1) is fully mixed.

2. A non-globally minimal system is transfer function equivalent (TFE) (see Sec. 5) to a QLS which is a series product of two systems; the first system has a pure stationary state, whereas the second has a fully mixed stationary state (see Fig. 6.1). We call these systems the pure component and mixed component, respectively.

3. The reduction to the mixed component is globally minimal and has the same power spectrum as the original system.

Proof. Let us prove the result first in the case $S = 1$.

Firstly, perform a change of system coordinates[2] as described in Sec. 3.1, so that the input is in the vacuum state, while the system modes decompose into its

[2]Note that such a symplectic transformation on the system is of form prescribed by Theorem 5, but the interpretation here is that we are dealing with the same system seen in a different basis, rather than a different system with the same transfer function.

'pure' and 'mixed' parts $\mathbf{a}'^T = (\mathbf{a}_p^T, \mathbf{a}_m^T)$. Note that this transformation will alter the coupling and Hamiltonian matrices accordingly, but we still denote them Ω and C to simplify notations.

Therefore, in this basis the stationary state of the system is given by the covariance

$$P = \left(\begin{smallmatrix} R+1 & 0 \\ 0 & R \end{smallmatrix}\right), \qquad R = \left(\begin{smallmatrix} 0 & 0 \\ 0 & R_m \end{smallmatrix}\right)$$

and satisfies the Lyapunov equation (6.1).

($\Longrightarrow$) We show that if the system has a pure component, then it is globally reducible. Let us write $A_\pm$ and $C_\pm$ as block matrices according to the pure-mixed splitting

$$A_\pm = \begin{pmatrix} A_\pm^{pp} & A_\pm^{pm} \\ A_\pm^{mp} & A_\pm^{mm} \end{pmatrix}, \qquad C_\pm = \left(C_\pm^p, C_\pm^m\right),$$

so that the Lyapunov equation (6.1) can be seen as a system of 16 block matrix equations. Taking the (1,1) and (1,3) blocks, which correspond to the $\left\langle \mathbf{a}_p \mathbf{a}_p^\dagger \right\rangle$ and $\langle \mathbf{a}_p \mathbf{a}_p \rangle$ components of the stationary state, one obtains

$$A_-^{pp} + A_-^{pp\dagger} + C_-^{p\dagger} C_-^p = 0 \tag{6.2}$$

$$A_+^{ppT} - C_-^{p\dagger} C_+^p = 0. \tag{6.3}$$

Since $A_-^{pp} = -i\Omega_-^{pp} - 1/2(C_-^{p\dagger} C_-^p - C_+^{pT} C_+^{p\#})$, Eq. (6.2) implies that $C_+^{pT} C_+^{p\#} = 0$, hence $C_+^p = 0$. Therefore, using this fact in Eq. (6.3) gives $A_+^{pp} = 0$, hence $\Omega_+^{pp} = 0$. These two tell us that the pure part contains only passive terms.

Consider now the $(1,2)$ and $(2,3)$ blocks, which correspond to the $\left\langle \mathbf{a}_p \mathbf{a}_m^\dagger \right\rangle$ and $\langle \mathbf{a}_m \mathbf{a}_p \rangle$ components of the stationary state. From this, we get

$$A_-^{pm}(R_m + 1) + A_-^{pm\dagger} + C_-^{p\dagger} C_-^m = 0 \tag{6.4}$$

$$(R_m + 1) A_+^{pmT} = 0. \tag{6.5}$$

Since $A_-^{pm} + A_-^{pm\dagger} + C_-^{p\dagger} C_-^m = 0$, and R_m is invertible, equation (6.4) implies $A_-^{pm} = 0$. Similarly, Eq. (6.5) implies that $A_+^{pm} = 0$.

Let $\mathcal{G}^p := (1, \Omega^{pp}, C^p)$ be the system consisting of the pure modes, with $\Omega^{pp} =$

$\Delta(\Omega^{pp}_-, 0)$ and $C^p = \Delta(C^p_-, 0)$. Let $\mathcal{G}^m := (1, \Omega^{mm}, C^m)$ be the system consisting of the mixed modes with $\Omega^{mm} = \Delta(\Omega^{mm}_-, \Omega^{mm}_+)$ and $C^m = \Delta(C^m_-, C^m_+)$. We can now show that the original system is the series product (concatenation) of the pure and mixed restrictions

$$\mathcal{G} = \mathcal{G}^m \triangleleft \mathcal{G}^p.$$

Indeed, using the fact that $C^p_+ = \Omega^{pp}_+ = A^{pm}_- = A^{pm}_+ = 0$, one can check that the series product has required matrices [22]

$$C_{series} = \tilde{C}^p + \tilde{C}^m = C$$

and

$$\Omega_{series} = \tilde{\Omega}^{pp} + \tilde{\Omega}^{mm} + \mathrm{Im}_\flat(\tilde{C}^\flat_m \tilde{C}_p)$$

where the 'tilde' notation stands for block matrices where only one block is non-zero, e.g. $\tilde{C}^p = (C^p, 0)$, and $\mathrm{Im}_\flat X := (X - X^\flat)/2i$.

Now, let $\Xi^{p,m}(s)$ denote the transfer functions of $\mathcal{G}^{p,m}$; since the transfer function of a series product is the product of the transfer functions, we have $\Xi(s) = \Xi^m(s) \cdot \Xi^p(s)$. Furthermore, since $\mathcal{G}^p$ is passive and the input is vacuum, we have $\Psi^p_V(s) = \Xi^p(s) V \Xi^p(-\overline{s})^\dagger = V$ so that

$$\Psi_V(s) = \Xi(s) V \Xi(-\overline{s})^\dagger = \Xi_m(s) V \Xi_m(-\overline{s})^\dagger$$

which means that the original system was globally reducible (not minimal).

($\Longleftarrow$) We now show that if the system's stationary state is fully mixed, then it is globally minimal. The key idea is that a sufficiently long block of output has a finite symplectic rank (number of modes in a mixed state in the canonical decomposition) equal to twice the dimension of the system. Therefore the dimension of a globally minimal system is "encoded" in the output. This is the linear dynamics analogue of the fact that stationary outputs of finite dimensional systems (or translation invariant finitely correlated states) have rank equal to the square of the system dimension (or bond dimension) [42]. To understand this property consider the system (S) together with the output at a long time $2T$, and split the output into two blocks: A corresponding to an initial time interval $[0, T]$ and B corresponding to $[T, 2T]$.

If the system starts in a pure Gaussian state, then the $S + A + B$ state is also pure. By ergodicity, at time T the system's state is close to the stationary state with symplectic rank d_m. At this point the system and output block A are in a pure state so by appealing to the 'Gaussian Schmidt decomposition' [70] we find that the state of the block A has the same symplectic eigenvalues (and rank d_m) as that of the system (see Fig. 6.1). In the interval $[T, 2T]$ the output A is only shifted without changing its state, but the correlations between A and S decay. Therefore the joint $S+A$ state is close to a product state and has symplectic rank $2d_m$. On the other hand we can apply the Schmidt decomposition argument to the pure bipartite system consisting of $S + A$ and B to find that the symplectic rank of B is $2d_m$. By ergodicity, B is close to the stationary state in the limit of large times, which proves the assertion.

To extend the result to $S \neq 1$, instead perform the change of field co-ordinates $V \mapsto S_{\text{in}} S^b V \left(S_{\text{in}} S^b\right)^\dagger$ in (3.4). The proof then follows as above because in this basis $S = 1$. □

This result has no classical analogue and is particularly interesting because it relates a classical concept, i.e, global minimality, with the quantum concept of purity. This theorem enables one to check global minimality by computing the symplectic eigenvalues of the stationary state (see Sec. 3.1). If all eigenvalues are non-zero, then the state is fully mixed and the system is globally minimal. We emphasise that the argument relies on the fact that the input is a pure state. For mixed input states, the stationary state may be fully mixed while the system is non globally minimal (see Sec. 6.10 later).

The following Lemma will be of use later.

Lemma 3. *Suppose that we have a QLS* (S, C, Ω) *with input* V_{vac}*, then the following are equivalent:*

(1) The system is globally minimal

(2) $\left(A, C^\flat S V_{\text{vac}}\right)$ *is controllable.*

(3) $\left(V_{\text{vac}} S^\flat C, A^\flat\right)$ *is observable.*

Proof. For the equivalence between (1) and (2): Using Theorem 8, global minimality is equivalent to a fully mixed stationary state, which is in turn equivalent to $P > 0$ in (6.1). Furthermore, by Theorem 3.1 in [49] $P > 0$ in Eq. (6.1) is equivalent to $\left(A, C^\flat S V_{\text{vac}}\right)$ being controllable.

It remains to show equivalence between (2) and (3). Firstly, by the duality condition (4) in Theorem 1 $\left(A, C^\flat S V_{\text{vac}}\right)$ controllable is equivalent to $\left(V_{\text{vac}} S^\dagger \left(C^\flat\right)^\dagger, A^\dagger\right)$ observable. It therefore remains to show equivalence between the observability of $\left(V_{\text{vac}} S^\dagger \left(C^\flat\right)^\dagger, A^\dagger\right)$ and $\left(V_{\text{vac}} S^\flat C, A^\flat\right)$.

Suppose that $\left(V_{\text{vac}} S^\dagger \left(C^\flat\right)^\dagger, A^\dagger\right)$ is observable. To show observability of $\left(V_{\text{vac}} S^\flat C, A^\flat\right)$ we need to show that for all eigenvectors and eigenvalues of $A^\flat$, i.e. $A^\flat y = \lambda y$, then $V_{\text{vac}} S^\flat C y \neq 0$ Theorem 2. To this end suppose that $A^\flat y = \lambda y$, then $A^\dagger (Jy) = \lambda (Jy)$, which by the observability of $\left(V_{\text{vac}} S^\dagger \left(C^\flat\right)^\dagger, A^\dagger\right)$ implies that $V_{\text{vac}} S^\dagger \left(C^\flat\right)^\dagger (Jy) \neq 0$. Therefore, $V_{\text{vac}} S^\flat C y \neq 0$ and we are done. The reverse implication follows similarly. □

For simplicity we shall now assume (until Sec. 6.7) that there is no squeezing or scattering in the field, i.e. $S = 1$. We discuss the case $S \neq 1$ in detail in Sec. 6.7.

6.2 Description of the Power Spectrum as Cascaded CLSs

In this subsection we show that the power spectrum of our QLS can be treated as a transfer function of a cascade of two classical systems (with the combined system having twice as many modes). Furthermore, the resultant cascaded system will be minimal iff the original system is globally minimal. This result will be particularly important in Sec. 6.4 because the power spectrum identification problem reduces to a transfer function identification problem, which is which is much simpler to solve.

Using Eq. (3.22) for the power spectrum, write $\Psi(s)J$ as a transfer function of the following two cascaded systems:

- The first system is $\left(-A^\flat, -C^\flat, -V_{\text{vac}} C, V_{\text{vac}}\right)$
- The second system is $\left(A, -C^\flat V_{\text{vac}}, C, V_{\text{vac}}\right)$.

It should be understood that the first system is fed into the second (see Fig. 6.2). Note that the first system is unstable, whereas the second is stable. Using Eq. (2.9), a representation for the resultant system with transfer function $\Psi(s)J$ is

$$\left(\tilde{A}, \tilde{B}, \tilde{C}, \tilde{D}\right) := \left(\begin{pmatrix} -A^\flat & 0 \\ C^\flat V_{\text{vac}} C & A \end{pmatrix}, \begin{pmatrix} -C^\flat \\ -C^\flat V_{\text{vac}} \end{pmatrix}, \begin{pmatrix} -V_{\text{vac}} C & C \end{pmatrix}, V_{\text{vac}}\right). \tag{6.6}$$

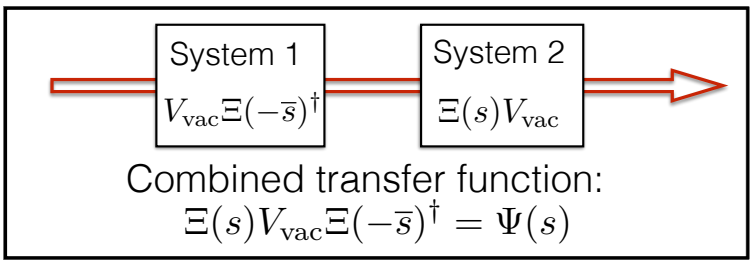

FIGURE 6.2: The setup in Sec. 6.2 where the power spectrum is treated as two systems connected in series.

Now, $\tilde{A}$ has $4n$ eigenvalues. It is also lower block triangular (LBT) with the following properties:

(1) It has $2n$ right-(generalised[3])-eigenvectors of the form $\begin{pmatrix} 0 \\ y_2^{(i)} \end{pmatrix}$ with (possibly non-distinct) eigenvalues $\lambda^{(i)}$, which satisfy $\text{Re}(\lambda^{(i)}) < 0$. Note that $y_2^{(i)}$ and $\lambda^{(i)}$ are right-(generalised) eigenvectors and eigenvalues of A.

[3]A matrix is diagonalisable iff it has a full basis of eigenvectors. Generalised eigenvectors are a next best thing to eigenvectors enabling one to 'almost diagonalise' a matrix. More specifically, a vector x is a generalised eigenvector of rank m with corresponding eigenvalue λ if

$$(A - \lambda 1)^m x = 0$$

(but $(A - \lambda 1)^{m-1} x \neq 0$). For every matrix A there exists an invertible matrix M, whose columns consist of the generalised eigenvectors, such that $J = M^{-1}AM$ where J is a matrix called the *Jordan normal matrix* and is given by

$$J = \text{Diag}(J_1, J_2, ..., J_r) \quad \text{where} \quad J_i = \begin{pmatrix} \lambda_i & 1 & & \\ & \lambda_i & 1 & \\ & & \ddots & 1 \\ & & & \lambda_i \end{pmatrix}.$$

(2) It has $2n$ left-(generalised)-eigenvectors of the form $\left(\begin{smallmatrix} x_1^{(i)}, & 0 \end{smallmatrix}\right)$ with (possibly non-distinct) eigenvalues $\mu^{(i)}$, which satisfy $\mathrm{Re}(\mu^{(i)}) > 0$. Note that $x_1^{(i)}$ and $\mu^{(i)}$ are left-eigenvectors and eigenvalues of $-A^\flat$.

Definition 12. *A matrix A is called proper ordered lower block triangular (proper LBT) if it is it LBT and satisfies (1) and (2).*

Lemma 4. *If two proper LBT matrices, $\tilde{A}$ and $\tilde{A}'$, are related via $\tilde{A}' = T\tilde{A}T^{-1}$, where T is invertible, then T is LBT.*

The proof is in Appendix B. The final result of this subsection, which is another equivalent formulation of global minimality, will be key to our main identifiability result in this chapter.

Theorem 9. *The quantum system (C, Ω) is globally minimal if and only if the system (6.6) is minimal.*

Proof. The reverse implication here is trivial. For the forward implication we need to prove controllability and observability.

Firstly, the observability of $\left(\tilde{C}, \tilde{A}\right)$. Suppose that

$$\begin{pmatrix} -A^\flat & 0 \\ C^\flat V_{\text{vac}} C & A \end{pmatrix} \begin{pmatrix} y_1 \\ y_2 \end{pmatrix} = \begin{pmatrix} \lambda y_1 \\ \lambda y_2 \end{pmatrix}, \tag{6.7}$$

then in order to show observability we require that $\begin{pmatrix} -V_{\text{vac}} C & C \end{pmatrix} \begin{pmatrix} y_1 \\ y_2 \end{pmatrix} \neq 0$. There are two cases; either $y_1 = 0$ or $y_1 \neq 0$.

- If $y_1 = 0$ then (6.7) reduces to $Ay_2 = \lambda y_2$ and so the observability of A tells us that $Cy_2 \neq 0$. Hence $\begin{pmatrix} -V_{\text{vac}} C & C \end{pmatrix} \begin{pmatrix} 0 \\ y_2 \end{pmatrix} \neq 0$.

- For $y_1 \neq 0$, the proof is a little trickier. Suppose to the contrary that the system is not observable. That is, there exists a vector $\begin{pmatrix} y_1 \\ y_2 \end{pmatrix}$ satisfying (6.7) such that

$$V_{\text{vac}} C y_1 = C y_2 \tag{6.8}$$

  Firstly, from (6.7) it is clear that $-A^\flat y_1 = \lambda y_1$, hence $V_{\text{vac}} C y_1 \neq 0$ by global minimality (Lemma 3). We also have $C^\flat V_{\text{vac}} C y_1 + A y_2 = \lambda y_2$ from (6.7), hence

$-A^\flat y_2 = \lambda y_2$ using (6.8). On the other hand, letting $y_2 = \left(\begin{smallmatrix} u_1 \\ u_2 \end{smallmatrix}\right)$, where u_1, u_2 are n dimensional complex vectors, then by the doubled-up properties of $A^\flat$ it follows that $\left(\begin{smallmatrix} \overline{u}_2 \\ \overline{u}_1 \end{smallmatrix}\right)$ is also an eigenvector of $-A^\flat$ (with eigenvalue $\overline{\lambda}$). Therefore, $V_{\text{vac}} C \left(\begin{smallmatrix} \overline{u}_2 \\ \overline{u}_1 \end{smallmatrix}\right) \neq 0$ by global minimality (Lemma 3). Finally, this condition implies that $\overline{C_-} u_2 + \overline{C_+} u_1 \neq 0$, which is a contradiction to (6.8). Hence the system is observable.

Showing controllability of $\left(\tilde{A}, \tilde{B}\right)$ can be achieved by similar means. Alternatively, we can use the dual properties of observability and controllability to show this. To this end, in order to show that $\left(\tilde{A}, \tilde{B}\right)$ is controllable it is enough to show that $\left(\tilde{B}^\dagger, \tilde{A}^\dagger\right)$ is observable (see Theorem 1). In light of this, suppose that $\tilde{A}^\dagger \left(\begin{smallmatrix} z_1 \\ z_2 \end{smallmatrix}\right) = \lambda \left(\begin{smallmatrix} z_1 \\ z_2 \end{smallmatrix}\right)$, which, by using the definition of $\tilde{A}$, is equivalent to

$$-JAJz_1 + C^\dagger V_{\text{vac}} C J z_2 = \lambda z_1 \quad \text{and} \quad A^\dagger z_2 = \lambda z_2.$$

These equations can be written in matrix form as

$$\tilde{A} \left(\begin{smallmatrix} Jz_2 \\ -Jz_1 \end{smallmatrix}\right) = -\lambda \left(\begin{smallmatrix} Jz_2 \\ -Jz_1 \end{smallmatrix}\right).$$

Now, because $\left(\tilde{C}, \tilde{A}\right)$ is observable, it follows that

$$-C\left(Jz_1\right) - V_{\text{vac}} C \left(Jz_2\right) \neq 0.$$

This condition is equivalent to $\tilde{B}^\dagger \left(\begin{smallmatrix} z_1 \\ z_2 \end{smallmatrix}\right) \neq 0$. □

6.3 Power Spectrum Identification of SISO QLSs

The following theorem shows that two generic[4] globally minimal SISO QLSs have the same power spectrum if and only if they have the same transfer function. In particular are related by a symplectic transformation, as described in Theorem 5.

[4]Under the conditions discussed in Sec. 5.2 allowing the transfer function to be realised as a cascade of one mode systems.

Theorem 10. *Let (C_1, Ω_1) and (C_2, Ω_2) be two globally minimal SISO systems for fixed pure input with covariance V_{vac}, which are assumed to be generic in the sense of [15]. Then*

$$\Psi_1(s) = \Psi_2(s) \ \textit{for all } s \quad \Leftrightarrow \quad \Xi_1(s) = \Xi_2(s) \ \textit{for all } s$$

Proof. Recall that the power spectrum of a system (C, Ω) is given by $\Xi(s)V_{\text{vac}}\Xi(-\overline{s})^{\dagger}$. Therefore, if $\Xi_1(s) = \Xi_2(s)$ then $\Psi_1(s) = \Psi_2(s)$. We will now prove the converse.

The power spectrum in the SISO case is given by

$$\begin{pmatrix} \Xi_-(s)\Xi_-(-\overline{s})^{\#} & \Xi_-(s)\Xi_+(-s) \\ \Xi_+(\overline{s})^{\#}\Xi_-(-\overline{s})^{\#} & \Xi_+(\overline{s})^{\#}\Xi_+(-s) \end{pmatrix}. \tag{6.9}$$

The transfer function is completely characterised by the elements in the top row of its matrix, i.e., $\Xi_-(s)$ and $\Xi_+(s)$. Also, $\Xi_-(s)$ and $\Xi_+(s)$ must be of the the form (5.9) and (5.10). Our first observation is that $\Xi_-(s)$ and $\Xi_+(s)$ in (5.9) and (5.10) cannot contain poles and zeros in the following arrangement: $\Xi_-(s)$ has a factor like

$$\frac{(s-\overline{\lambda}_i)(s+\overline{\lambda}_i)}{(s-\overline{\lambda}_i)(s-\lambda_i)} = \frac{(s+\overline{\lambda}_i)}{(s-\lambda_i)} \tag{6.10}$$

and $\Xi_+(s)$ contains a factor like

$$\frac{(s-\lambda_i)(s+\lambda_i)}{(s-\overline{\lambda}_i)(s-\lambda_i)} = \frac{(s+\lambda_i)}{(s-\overline{\lambda}_i)}. \tag{6.11}$$

For if this were the case and assuming that this could be done k times, then our original system could be decomposed as a cascade (series product) of two systems.

- The first system is an k-mode passive system with transfer function

$$\Xi^{(1)}(s) = \begin{pmatrix} \Xi_-^{(1)}(s) & 0 \\ 0 & \Xi_-^{(1)}(\overline{s})^{\#} \end{pmatrix}, \tag{6.12}$$

  where

$$\Xi_-^{(1)}(s) = \prod_{i=1}^{k} \frac{(s+\overline{\lambda}_i)}{(s-\lambda_i)}, \qquad \Xi_-^{(1)}(\overline{s})^{\#} = \prod_{i=1}^{k} \frac{(s+\lambda_i)}{(s-\overline{\lambda}_i)}.$$

Note that by Example 7 it is physical.

- The second system has transfer function

$$\Xi^{(2)}(s) = \begin{pmatrix} \Xi_-^{(2)}(s) & \Xi_+^{(2)}(s) \\ \Xi_+^{(2)}(\overline{s})^\# & \Xi_-^{(2)}(\overline{s})^\# \end{pmatrix}, \tag{6.13}$$

where

$$\Xi_-^{(2)}(s) = \Xi_-(s) \prod_{i=1}^{k} \frac{(s+\overline{\lambda}_i)}{(s-\lambda_i)},$$

$$\Xi_+^{(2)}(s) = \Xi_+(s) \prod_{i=1}^{k} \frac{(s+\lambda_i)}{(s-\overline{\lambda}_i)}.$$

It can be shown that there exists an $n-k$ mode minimal physical quantum system with this transfer function (see Appendix C).

Since $\Xi^{(1)}(s)$ is passive,

$$\Xi^{(1)}(s) V_{\text{vac}} \Xi^{(1)}(-\overline{s})^\dagger = V_{\text{vac}}$$

and hence this k-mode system is not visible from the power spectrum, while the power spectrum is the same as that of the lower dimensional system $\Xi^{(2)}(s)$. Therefore we have a contradiction to global minimality.

We will now construct $\Xi_-(s)$ and $\Xi_+(s)$ directly from the power spectrum. This is equivalent to identifying their poles and zeros [5]. To do this we must identify all poles and zeros of $\Xi_-(s)$ and $\Xi_+(s)$ from the three quantities:

$$\Xi_-(s)\Xi_-(-\overline{s})^\# \tag{6.14}$$

$$\Xi_-(s)\Xi_+(-s) \tag{6.15}$$

$$\Xi_+(\overline{s})^\#\Xi_+(-s). \tag{6.16}$$

Firstly, all poles of $\Xi_-(s)$ and $\Xi_+(s)$ may be identified from the power spectrum. Indeed, due to stability, each pole in (6.14), (6.15), (6.16) can be assigned unambiguously to either $\Xi_-(s)$ or $\Xi_+(-s)$. However, cancelations between zeros and poles of the two terms in the product may lead to some transfer function poles not being

[5] Note that some of the poles and zeros in (5.9) and (5.10) may be "fictitious" and so will not be required to be identified.

identifiable, so we need to show that this is not possible. Suppose that a pole λ of $\Xi_-(s)$ is not visible from the power spectrum. This implies

- From (6.14), λ is a zero of $\Xi_-(-\overline{s})^{\#}$ (equivalently $-\overline{\lambda}$ is a zero of $\Xi_-(s)$), and
- From (6.15), λ is a zero of $\Xi_+(-s)$ (equivalently $-\lambda$ is a zero of $\Xi_+(s)$).

We consider two separate cases: λ non-real or real.

- If λ is non-real then from the symmetries of the poles and zeros in (5.9) and (5.10), $\Xi_-(s)$ will contain a term like (6.10) and $\Xi_+(s)$ will contain a term like (6.11). By the argument above, the system is non-globally minimal as there will be a mode of the system that is non-visible in the power spectrum. Therefore all non-real poles of $\Xi_-(s)$ may be identified. A similar argument ensures that all poles of $\Xi_+(s)$ are visible in the power spectrum.
- If λ is real, then $\Xi_-(s)$ must have a zero at $-\lambda$ for it not to be visible in (6.14). The symmetries of the zeros in (5.9) would suggest that there is another zero at λ. However this would cancel our original pole. Therefore, there must be a second pole at λ in (5.9) (and thus we have a fictitious pole-zero pair in $\Xi_-(s)$). In summary $\Xi_-(s)$ has a term like (6.10). Also, $\Xi_+(s)$ must also have an arrangement of poles and zeros as in (6.11), otherwise $|\Xi_-(-i\omega)|^2 - |\Xi_+(-i\omega)|^2 = 1$ could not hold. Hence we have a contradiction to global minimality.

Therefore we conclude that all poles of $\Xi_\pm(s)$ can be identified from the power spectrum, and we focus next on the zeros. Unlike the case of poles, it is not clear whether a given zero in any of these plots belongs to the factor on the left or the factor on the right in each of these equation (i.e., to $\Xi_-(s)$ or $\Xi_-(-\overline{s})^{\#}$ in (6.14), etc).

Since the poles of $\Xi_-(s)$ and $\Xi_+(s)$ may be different due to cancellations in (5.9) and (5.10), it is convenient here to add in "fictitious" zeros into the plots (6.14), (6.15) and (6.16) so that $\Xi_-(s)$ and $\Xi_+(s)$ have the same poles. Note that these fictitious poles and zeros would have been present in (5.9) and (5.10) before simplification. From this point onwards, the zeros in (6.14), (6.15) and (6.16) will refer to this augmented list which includes the additional zeros.

Real zeros:

In general the real zeros of $\Xi_-(s)$ and $\Xi_+(s)$ come in pairs $\pm\lambda$ (see equations (5.9), (5.10)), unless a pole and zero (or more than one) cancel on the negative real line. Our task here is to distinguish these two cases from the plots (6.14) (6.15) and (6.16). $\Xi_-(s)$ has either

- i) zeros at $\pm\lambda$, or
- ii) a zero at $\lambda > 0$ but not at $-\lambda$.

In case i) (6.14) will have a double zero at each $\pm\lambda$, whereas in case ii) (6.14) will have a single zero at $\pm\lambda$. We need to be careful here in discriminating cases i) and ii) on the basis of the zeroes of (6.14). For example, a double zero at λ in (6.14) could be a result of one case i) or two case ii) in $\Xi_-(s)$. More generally, we could have an nth order zero at λ and as a result even more degeneracy is possible. A similar problem arises for the zeros of $\Xi_+(s)$ in (6.16).

Our first observation here is that it is not possible for both $\Xi_-(s)$ and $\Xi_+(s)$ to have zeros at $\pm\lambda$ (taking $\lambda > 0$ without loss of generality). If this were possible then by using the symplectic condition $|\Xi_-(-i\omega)|^2 - |\Xi_+(-i\omega)|^2 = 1$ and the fact that we are assuming that $\Xi_-(s)$ and $\Xi_+(s)$ have the same poles tells us that $\Xi_-(s)$ and $\Xi_+(s)$ must both have had double poles at $-\lambda$. The upshot is that $\Xi_-(s)$ and $\Xi_+(s)$ will have terms of the form (6.10) and (6.11), which is a contradiction.

Now, suppose (6.14) has n zeros at $\lambda > 0$ and (6.16) has m zeros at $\lambda > 0$. Then we know that $\Xi_-(s)$ must have $\frac{n-p}{2}$ zeros at $-\lambda$ and $\frac{n+p}{2}$ zeros at λ. Also, $\Xi_+(s)$ must have $\frac{m-q}{2}$ zeros at $-\lambda$ and $\frac{m+q}{2}$ zeros at λ. The goal here is to find p and q because if these are known then it is clear that there must be $\frac{n-p}{2}$ ($\frac{m-q}{2}$) type i) zeros and p (q) type ii) zeros in $\Xi_-(s)$ ($\Xi_+(s)$).

By the observation above it is clear that either $p = n$ or $q = m$. Also, in (6.15) there will be $\frac{n+m+p-q}{2}$ zeros at λ and $\frac{n+m+q-p}{2}$ zeros at $-\lambda$. Hence $q - p$ is known at this stage. Finally, it is fairly easy to convince ourselves that if $p = n$ but one concludes that $q = m$ (or vice-versa) and using the value of $q - p$ leads to a contradiction. Hence p and q can be determined uniquely. For example, if $n = 2$, $m = 5$, $q = 2$ and $p = 3$ so that $q = n$ and $q - p = -1$. Then assuming wrongly

that $p = 5$ and using $q - p = -1$ it follows that $q = 4$ and so n must be 6, which is incorrect.

Having successfully identified all real zeros, we now show how to identify the zeros of $\Xi_-(s)$ and $\Xi_+(s)$ away from the real axis.

Complex (non real) zeros:

Comparing the zeros of (6.14) with those of (6.15) we find two cases in which the zeros can be assigned directly

- Case 1: Let z be a zero of (6.14) that is not a zero of (6.15). Then z must be a zero of $\Xi_-(-\overline{s})^{\#}$. Hence $-\overline{z}$ is a zero of $\Xi_-(s)$.
- Case 2: Let w be a zero of (6.15) that is not a zero of (6.14). Then w must be a zero of $\Xi_+(-s)^{\#}$. Hence $-w$ is a zero of $\Xi_+(s)$.

The question now is whether this procedure enables one to identify all zeros? Suppose that there is a zero v that is common to both of these plots. Then $-\overline{v}$ must also be a zero of (6.14). Now, if $-\overline{v}$ is not a zero of (6.15) then v is identifiable as belonging to $\Xi_-(s)$.

Therefore we can restrict our attention to the case that the zero pair $\{v, -\overline{v}\}$ is common to both plots. Note that in this instance the list of zeros of (6.16) will also contain $\{v, -\overline{v}\}$. Assume without loss of generality that v is in the right half complex plane. Note that there cannot be a second zero pair $\{u, -\overline{u}\}$ such that $u = \overline{v}$. If this were the case then either $\{v, -v\}$ will be zeros of $\Xi_-(s)$ and $\{-\overline{v}, \overline{v}\}$ will be zeros of $\Xi_+(s)$, or $\{u, -u\}$ will be zeros of $\Xi_-(s)$ and $\{-\overline{u}, \overline{u}\}$ will be zeros of $\Xi_+(s)$. In either case by using the condition $|\Xi_-(-i\omega)|^2 - |\Xi_+(-i\omega)|^2 = 1$ for all ω and the fact that $\Xi_-(s)$ and $\Xi_+(s)$ have the same poles by assumption, it follows that $\Xi_-(s)$ and $\Xi_+(s)$ will have terms of the form (6.10) and (6.11), which contradicts global minimality. Finally, under the assumptions that the zero pair $\{v, -\overline{v}\}$ is common to both (6.15) and (6.14) with no second pair at $\{u, -\overline{u}\}$ such that $u = \overline{v}$, then we can conclude that v must be a zero of $\Xi_-(s)$. For if this were not the case and so $-\overline{v}$ were a zero of $\Xi_-(s)$ then there must be another zero of $\Xi_-(s)$ at $\overline{v}$ (since pole-zero cancellation cannot occur in the right-half plane). Also from (6.15) this would require that $\Xi_+(s)$ has a zero at $-v$ (hence also v). Therefore we have a contradiction to the fact that there is no second pair at $\{u, -\overline{u}\}$ such that $u = \overline{v}$.

Therefore we have successfully identified all zeros of the transfer function away from the real axis, which completes the proof. □

In light of this Theorem two globally minimal SISO systems are related by a symplectic transformation as described in Theorem 5. Further it enables one to construct the transfer function of the systems globally minimal part. From this, one can then construct a system realisation of this globally minimal restriction, using the results from Sec. 5.3 or 5.4. We call this realisation method indirect because one first finds a transfer function fitting the power spectrum before constructing the system realisation.

Corollary 2. *Let (C, Ω) be a SISO QLS with pure input $V(N, M)$. Then one can construct a globally minimal realisation, (C', Ω')* ***indirectly*** *from the power spectrum generated by the QLS (C, Ω). The realisation (C', Ω') will be unique up to the symplectic equivalence in Theorem 5.*

6.4 Power Spectrum Identification of General QLSs

We now give an alternative argument for the identifiability result in the previous subsection. The argument holds for all QLSs, rather than just the generic SISO class in the last subsection. Our method uses the work in Sec. 6.2 to reduce the power spectrum identifiability problem to an equivalent (yet simpler) transfer function identifiability problem.

Theorem 11. *Let (C_1, Ω_1) and (C_2, Ω_2) be two globally minimal and stable QLSs for input V_{vac}, then*

$$\Psi_1(s) = \Psi_2(s) \ for\ all\ s \quad \Leftrightarrow \quad \Xi_1(s) = \Xi_2(s) \ for\ all\ s$$

Proof. To prove this result, we use the results of Sec. 6.2 to write our globally minimal power spectrum identification problem as a minimal transfer function identification problem. That is, by Theorem 9 the system (6.6) is minimal. Therefore,

from the classical literature TFE systems are related via

$$\tilde{A}' = T\tilde{A}T^{-1}, \quad \tilde{B}' = T\tilde{B}, \quad \tilde{C}' = \tilde{C}T^{-1}, \quad \tilde{D}' = \tilde{D}. \tag{6.17}$$

Moreover, its observability and controllability matrices, $\mathcal{O}$ and $\mathcal{C}$, will have full rank. Additionally, by Lemma 4 such a similarity transformation must be lower block triangular.

Now writing T as

$$\left(\begin{smallmatrix} T_1 & 0 \\ T_3 & T_4 \end{smallmatrix}\right),$$

to complete the proof it remains to show that (a) $T_3 = 0$, (b) $T_1 = T_4$, (b) $T_1^\flat T_1 = 1$ and (d) T_1 is doubled up. This is sufficient because it tells us that the equivalence classes of the power spectrum are related via symplectic similarity transformations (and they are the same gauge transformations as those obtained from the transfer function (see Ch. 5)). The outline of how we show (a)-(d) is given in the following three steps. The complete proof can be found in Appendix D.

(1) Firstly, using the pattern in the $\tilde{A}$, $\tilde{B}$ and $\tilde{C}$ matrices defined above, we show that the following holds:

$$\mathcal{O} = \mathcal{O}\left(\begin{smallmatrix} T_4^\flat & 0 \\ -T_3^\flat & T_1^\flat \end{smallmatrix}\right) T.$$

And so because $\mathcal{O}$ has full rank, we have

$$\left(\begin{smallmatrix} T_4^\flat & 0 \\ -T_3^\flat & T_1^\flat \end{smallmatrix}\right) T = 1.$$

(2) We will then show that:

$$\mathcal{O}\left(\begin{smallmatrix} T_4^\flat - T_1^\flat \\ -T_3^\flat \end{smallmatrix}\right) = 0.$$

This implies that $T_3 = 0$ and $T_1 = T_4$.

(3) Combing Steps (1) and (2) it is clear that T must be of the form

$$T = \left(\begin{smallmatrix} T_1 & 0 \\ 0 & T_1 \end{smallmatrix}\right)$$

with $T_1^\flat T_1 = 1$. Finally we show that T_1 is doubled-up.

□

Remark 4. *For general input* $V = S_0 V_{\text{vac}} S_0^\dagger$*, clearly PQLSs of the form* $\mathcal{G} = (S_0 \Delta((C_-, 0), \Delta(\Omega_-, 0))$ *will have trivial power spectrum. Theorem 10 says that these are the only such systems (up to symplectic equivalence in Theorem 5).*

6.5 Identification Method

Suppose that we have constructed the power spectrum from the input-output data, for instance by treating it as a transfer function and using one of the techniques of [38]. Here we outline a method to construct a globally minimal system realisation from the power spectrum. This method will provide us with a system realisation *directly*, rather than indirectly via the transfer function (see Sec. 6.3). The realisation is obtained by first finding a non-physical realisation and then constructing a physical one from this by applying a criterion developed in [49]. The identification method is similar to the one used in Sec. 5.4 for the transfer function realisation problem.

We have seen many times that the power spectrum may be treated as if it were a transfer function. Therefore, let $\left(\tilde{A}_0, \tilde{B}_0, \tilde{C}_0, V_{\text{vac}}\right)$ constitute a minimal realisation of $\Psi(s)$, i.e.,

$$\Psi(s)J = V_{\text{vac}} + \tilde{C}_0 \left(s - \tilde{A}_0\right)^{-1} \tilde{B}_0.$$

Further, let us assume that $\tilde{A}_0, \tilde{B}_0, \tilde{C}_0$ are of the form

$$\tilde{A}_0 = \begin{pmatrix} -A_0^\flat & 0 \\ 0 & A_0 \end{pmatrix} \quad \tilde{B}_0 = \begin{pmatrix} B_1 \\ B_2 \end{pmatrix} \quad \tilde{C}_0 = \begin{pmatrix} C_1 \\ C_2 \end{pmatrix},$$

with, A_0, B_1 and C_2 doubled up and A_0 is stable. For example, in Appendix E such a realisation is found for an n-mode globally minimal system, with matrices (A, C), possessing $2n$ distinct poles each with non-zero imaginary part.

Now, by minimality, any other realisation of the transfer function can be generated by the similarity transformation

$$\tilde{A} = T\tilde{A}_0 T^{-1} \quad \tilde{B} = T\tilde{B}_0 \quad \tilde{C} = \tilde{C}_0 T^{-1}. \tag{6.18}$$

The problem here is that in general these matrices may not describe a genuine quantum system in the sense that from a given $\left(\tilde{A}, \tilde{B}, \tilde{C}\right)$ one cannot reconstruct the pair

(Ω, C) describing the power spectrum. Our goal is to find a special transformation T mapping $(\tilde{A}_0, \tilde{B}_0, \tilde{C}_0)$ to a triple $(\tilde{A}, \tilde{B}, \tilde{C})$ that is physical.

Firstly, as $\tilde{A}_0$ and the physical $\tilde{A}$ we seek are both proper LBT, then by Lemma 4 we may restrict T to be of the form

$$T = \left(\begin{smallmatrix} T_1 & 0 \\ T_2 & T_3 \end{smallmatrix}\right), \quad T^{-1} = \left(\begin{smallmatrix} T_1^{-1} & 0 \\ -T_3^{-1}T_2T_1^{-1} & T_3^{-1} \end{smallmatrix}\right).$$

Using this together with (6.18) and $(\tilde{A}, \tilde{B}, \tilde{C})$ in (6.6) gives:

$$A^\flat = T_1 A_0^\flat T_1^{-1} \quad \text{and} \quad -C^\flat = T_1 B_1 \tag{6.19}$$

$$A = T_3 A_0 T_3^{-1} \quad \text{and} \quad C = C_2 T_3^{-1} \tag{6.20}$$

$$C^\flat V_{\text{vac}} C = -T_2 A_0^\flat T_1^{-1} - T_3 A_0 T_3^{-1} T_2 T_1^{-1} \tag{6.21}$$

$$-V_{\text{vac}} C = C_1 T_1^{-1} - C_2 T_3^{-1} T_2 T_1^{-1}. \tag{6.22}$$

$$-C^\flat V_{\text{vac}} = T_2 B_1 + T_3 B_2 \tag{6.23}$$

For (A, C) to correspond to a quantum system it must satisfy the physical realisability conditions: $A + A^\flat + C^\flat C = 0$ (Sec. 3.3). Applying this condition to (6.19) and (6.20) gives:

$$A_0^\flat \left(T_1^\flat T_1\right)^{-1} + \left(T_1^\flat T_1\right)^{-1} A_0 + B_1 B_1^\flat = 0 \tag{6.24}$$

$$\left(T_3^\flat T_3\right) A_0 + A_0^\flat \left(T_3^\flat T_3\right) + C_2^\flat C_2 = 0. \tag{6.25}$$

Next as quantum system is stable, A_0 must be Hurwitz (because it is similar to A). Therefore (6.24) and (6.25) have unique solutions, given by

$$\left(T_1^\flat T_1\right)^{-1} = \int_0^\infty J \left(B_1^\dagger J e^{A_0 t}\right)^\dagger J \left(B_1^\dagger J e^{A_0 t}\right) dt \tag{6.26}$$

$$\left(T_3^\flat T_3\right) = \int_0^\infty J \left(C_2 e^{A_0 t}\right)^\dagger J \left(C_2 e^{A_0 t}\right) dt. \tag{6.27}$$

Moreover, these solutions will necessarily be of doubled-up form due to the fact A_0, B_1 and C_2 were. Therefore, using Lemma 2 from Sec. 5.4 we can find doubled-up T_1 and T_3 from these uniquely (up to the non-identifiable symplectic equivalence class in Theorem 11).

The upshot of these results is that we may ultimately write down a realisation of the system (A, C) using (6.19) or alternatively from (6.20). By Theorem 11 both solutions are guaranteed to coincide (bar any unidentifiable symplectic matrix) and give a unique (up to such a symplectic transformation) realisation of the power spectrum, hence we are done.

For completeness we may write down the unique solution T_2 given the solutions T_1 and T_3 so to obtain the full realisation (6.6) of the power spectrum. To this end, suppose that the solutions T_1 and T_2 from (6.26) and (6.27) lead to (physical) realisations (A, C) and $(\hat{A}, \hat{C})$ that differ by an (unidentifiable) symplectic. That is, $A = S\hat{A}S^\flat$ and $C = \hat{C}S^\flat$. Then from (6.21) we have

$$S\hat{C}^\flat V_{\text{vac}}\hat{C} + \left(T_2T_1^{-1}S\right)\hat{A}^\flat + \hat{A}\left(T_2T_1^{-1}S\right) = 0,$$

which has been obtained by substituting (6.19) and (6.20) into (6.21). This solution $\left(T_2T_1^{-1}S\right)$ can be found uniquely, hence T_2 can be found uniquely from this. Note that T_2 will not be of doubled-up type, which is to be expected.

6.6 Realisation Example

We now give an example of the identification method above. Suppose that we have a one-mode QLS characterised by the matrices:

$$(\Omega, C) = (\Delta(2, i), \Delta(7, -1))$$

We will now construct a realisation of this system directly from the power spectrum. That is, we will pretend that we didn't have this realisation beforehand and are given only the following power spectrum:

$$\Psi(s)J = \frac{1}{16s^4 + 1464s^2 + 40401}\begin{pmatrix} 16s^4+1464s^2+53084 & s^2(-448+48i)-22176-13484i \\ s^2(448+48i)+22176-13484i & -12688 \end{pmatrix}.$$

Finding the classical realisation: The power spectrum may be expanded as in (E.2) where $n = 1$ $\lambda_1 = -24 + 1.732i$ and

$$I_1 = \begin{pmatrix} -0.0278-0.3849i & 1.0496-0.2582i \\ 0.1051+0.0516i & 0.0278+0.3849i \end{pmatrix} \quad K_1 = \begin{pmatrix} -0.0278+0.3849i & -0.1051+0.0516i \\ -1.0496-0.7182i & 0.0278-0.3849i \end{pmatrix}.$$

$$T_1 = \begin{pmatrix} 0.0278+0.3849i & +0.1051-0.0516i \\ 1.0496+0.7182i & -0.0278+0.3849i \end{pmatrix} \quad W_1 = \begin{pmatrix} 0.0278+0.3849i & -1.0496+7182i \\ -0.1051-0.0516i & -0.0278-0.3849i \end{pmatrix}.$$

Therefore, we can write $\tilde{A}_0$, $\tilde{B}_0$ and $\tilde{C}_0$ as

$$\tilde{A}_0 = \mathrm{Diag}(24 + 1.732i, 24 - 1.732i, -24 + 1.732i, -24 - 1.732i)$$

$$\tilde{B}_0 = \begin{pmatrix} 1 & 1.6603+2.8463i \\ 1.6603-2.8463i & 1 \\ 0.0278+-0.3849i & 0.1051-0.0516i \\ -0.1051-0.0516i & -0.0278+-0.3849i \end{pmatrix}$$

$$\tilde{C}_0 = \begin{pmatrix} -0.0278-0.3849i & -0.1051i+0.0516i & 1 & -1.6619-2.8463i \\ 0.1051+0.0516i & 0.0278-0.3849i & -1.6619+2.8463i & 1 \end{pmatrix}.$$

Note that B_1 and C_2 as defined in the previous subsection are doubled-up and further observe that $B_1 = -C_2^\flat$.

Finding the quantum realisation From (6.26) and (6.27) we have

$$\left(T_1^\flat T_1\right)^{-1} = T_3^\flat T_3 = \begin{pmatrix} -0.2054 & 0 \\ 0 & -0.2054 \end{pmatrix}.$$

Therefore, we can let

$$T_3 = -\left(T_1^\flat\right)^{-1} = \begin{pmatrix} 0 & -0.4532i \\ 0.4532i & 0 \end{pmatrix}.$$

In particular, the choice $T_3 = -\left(T_1^\flat\right)^{-1}$ and the condition $B_1 = -C_2^\flat$ ensures that the physical realisations coming from (6.19) and (6.20) are the same (rather than differing by a symplectic). Therefore from (6.21) we have

$$T_2 = \begin{pmatrix} 0.6604+0.3243i & -2.4312i \\ -0.2238i & -0.6604+0.3243i \end{pmatrix}$$

.

In summary, the realisation of the power spectrum is given by

$$A = \begin{pmatrix} -24-1.732i & 0 \\ 0 & -24+1.732i \end{pmatrix} \quad \text{and} \quad C = \begin{pmatrix} 6.2803-3.6669i & -2.2065i \\ 2.2065i & 6.2803+3.6669i \end{pmatrix}.$$

6.7 Scattering and Squeezing

We now show how to extend our power spectrum identifiability results to allow for scattering and squeezing in the field. As in Sec. 6.2 we can represent the power spectrum $\Psi(s)J$ of the system (S, C, Ω) as a (classical) cascaded system:

$$\left(\tilde{A}, \tilde{B}, \tilde{C}, \tilde{D}\right) := \left(\begin{pmatrix} -A^\flat & 0 \\ C^\flat S V_{\text{vac}} S^\flat C & A \end{pmatrix}, \begin{pmatrix} -C^\flat \\ -C^\flat S V_{\text{vac}} S^\flat \end{pmatrix}, \begin{pmatrix} -S V_{\text{vac}} S^\flat C & SC \end{pmatrix}, S V_{\text{vac}} S^\flat\right) \quad (6.28)$$

(see (6.6)). Note that if S is a purely scattering transformation, i.e, it is a unitary symplectic matrix, then system (6.28) reduces to system (6.6).

Now, Theorem 9 also holds in the case of non-trivial S, i.e. system (6.28) is minimal iff (S, C, Ω) is globally minimal. The proof is very similar to the proof of Theorem 9.

We can also prove a modified version of Theorem 11.

Theorem 12. *Let (S_1, C_1, Ω_1) and (S_2, C_2, Ω_2) be two globally minimal and stable QLSs for input V_{vac}, then*

$$\Psi_1(s) = \Psi_2(s) \text{ for all } s \Leftrightarrow S_1 V_{\text{vac}} S_1^\dagger = S_2 V_{\text{vac}} S_2^\dagger,\ C_1 = C_1 T^\flat,\ J\Omega_1 = TJ\Omega_2 T^\flat$$

for some symplectic matrix T.

Proof. Firstly, the condition $S_1 V_{\text{vac}} S_1^\dagger = S_2 V_{\text{vac}} S_2^\dagger$ follows by choosing $s = -i\omega$ and taking the limit $\omega \mapsto \infty$. By following the method with identical steps to those in Theorem 11 the remainder of the proof may be obtained. The proofs of each step are almost identical to those in Appendix D, except for keeping track of the matrix S, which offers little additional complication. □

Therefore the consequence of allowing for a non-trivial scattering is an extra condition on the classes of equivalent systems, namely $S_1 V_{\text{vac}} S_1^\dagger = S_2 V_{\text{vac}} S_2^\dagger$. An equivalent formulation of this result can be stated in the following Corollary.

Corollary 3. *Suppose that the system $\mathcal{G} = (1, C, A)$ has power spectrum $\Psi(s)$, then all other systems with the same power spectrum are given by*

$$\mathcal{G}' := (S', C', A') := \left(S, CT^\flat, TAT^\flat\right),$$

where T is symplectic and S is unitary and symplectic.

This should be seen as the main result of this chapter. Notice the subtlety here that the transfer function of the systems $\mathcal{G}$ and $\mathcal{G}'$ differ slightly, that is, $\Xi_{\mathcal{G}'}(s) = \Xi_{\mathcal{G}}(s)S$. Therefore, one is able to recover the transfer function from the power spectrum uniquely up to a passive transformation on the field.

Finally, an identification method similar to the one in Sec. 6.5 may be developed to include non-trivial S, but we do not discuss this any further here.

6.8 Passive Quantum Linear Systems

In this section we restrict our attention to *passive* QLSs (see Sec. 3.5). As we mentioned earlier, we drop the doubled-up notation for PQLSs and work with the triple (S_-, C_-, Ω_-). For simplicity we only consider the case $S_- = 1$ here and we drop the subscript minus for convenience. If the input state is vacuum then the power spectrum is trivial ($\Phi_V = V$) and the only globally minimal systems are the trivial ones (zero internal modes). For this reason we consider *squeezed* inputs, with pure input $V(N, M)$.

We first discuss SISO PQLSs in Sec. 6.8.1 and then MIMO PQLSs in Sec. 6.8.2.

6.8.1 SISO

The main identifiability problems that we have considered throughout this chapter turn out to have a much simpler solution for SISO PQLSs.

Now, the transfer function is given by

$$\Xi(s) = 1 - C(s1_n - A)^{-1}C^\dagger = \frac{\mathrm{Det}\left(s1_n + A^\#\right)}{\mathrm{Det}\left(s1_n - A\right)}$$

where $A = -i\Omega - \frac{1}{2}C^\dagger C$ and its spectrum is $\sigma(A) := \{\lambda_1, \ldots, \lambda_n\}$. It is a monic rational function in s (see Nomenclature), with poles $p_i = \lambda_i$ in the left half plane, and zeros $z_i = -\overline{p_i} = -\overline{\lambda_i}$ in the right half plane.

Theorem 13. *Consider a general SISO PQLS $\mathcal{G} = (C, \Omega)$ with pure input $V(N, M)$, such that $M \neq 0$.*

1) The following are equivalent:

i) the system is globally minimal

ii) the stationary state of the system is fully mixed

iii) A and $A^\dagger$ have different spectra, i.e. $\sigma(A) \cap \sigma(A^\dagger) = \emptyset$

iv) A does not have real, or pairs of complex conjugate eigenvalues.

2) Let $\mathcal{P}$ be the set of all eigenvalues of A that are either real or come in complex conjugate pairs. A globally minimal realisation of the system is given by the series product of one mode systems $\mathcal{G}_{m,i} = (c_i = \sqrt{2|\mathrm{Re}\lambda_i|}, \Omega_i = -\mathrm{Im}\lambda_i)$ for indices i such that $\lambda_i \notin \mathcal{P}$.

Proof. 1) For passive SISO systems the only non-trivial contribution to the power spectrum is from off-diagonal element

$$\begin{aligned}\Xi(s)\Xi(-s) &= \frac{\mathrm{Det}\left(s1_n + A^\dagger\right)}{\mathrm{Det}\left(s1_n - A\right)} \times \frac{\mathrm{Det}\left(s1_n - A^\dagger\right)}{\mathrm{Det}\left(s1_n + A\right)} \\ &= \prod_{i=1}^{n} \frac{s + \overline{\lambda}_i}{s - \lambda_i} \cdot \frac{s - \overline{\lambda}_i}{s + \lambda_i}.\end{aligned}$$

In the above expression, zero-pole cancellations occur if and only if $\sigma(A) \cap \sigma(A^\dagger) \neq \emptyset$, or equivalently if A has a real eigenvalue or a pair of complex conjugate eigenvalues (see Fig. 6.3).

If no zero-pole cancellations occur, then $\sigma(A)$ can be identified from $\Xi(s)\Xi(-s)$ and the transfer function can be reconstructed. In this case the system is globally minimal.

If cancellations do occur then this happens in one of the two types of situations:

a) real eigenvalue: if $\lambda_i \in \mathbb{R}$ then the corresponding term in the above product cancels

b) complex conjugate pairs: if $\lambda_i = \overline{\lambda}_j$ then the i and j terms in the product cancel against each other.

In both cases, the remaining power spectrum has the same form, and can be seen as the power spectrum of a series product of one dimensional passive systems, with dimension smaller than n, and therefore the system is not minimal.

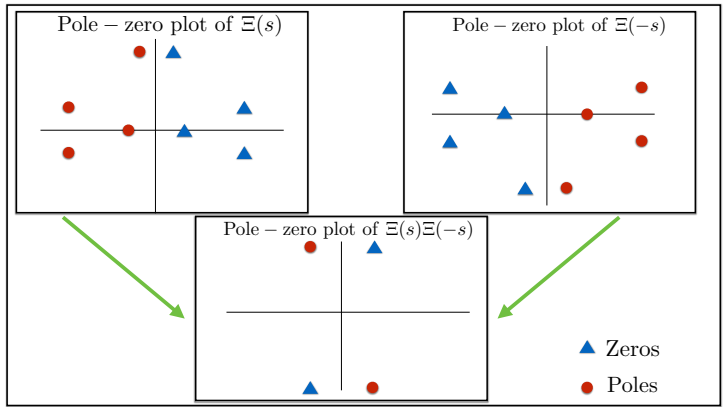

FIGURE 6.3: There are two types of cancellations in $\Xi(s)\Xi(-s)$. Either (i) when $\Xi(s)$ has a real pole or (ii) when there is a pole, p, and zero, z, of $\Xi(s)$ such that $p = -z$. Both are illustrated here.

This shows the equivalence of i), iii) and iv) while the equivalence of i) and ii) follows from Theorem 8.

2) The discussion so far shows that the transfer function factorises as the product $\Xi(s) = \Xi_{\mathrm{m}}(s)\Xi_{\mathrm{p}}(s)$ of a part corresponding to eigenvalues $\lambda_i \in \mathcal{P}$, which has trivial power spectrum due to zero-pole cancellations, and the part corresponding to the complement which does not exhibit any cancelations. A system with transfer function $\Xi(s)$ can be realised as series product $\mathcal{G}_m \triangleleft \mathcal{G}_p$ of two separate passive systems with transfer functions $\Xi_{\mathrm{m}}(s)$ and $\Xi_{\mathrm{p}}(s)$. As argued before, $\mathcal{G}_p$ has a pure stationary state which is uncorellated to $\mathcal{G}_m$ or the output, while $\mathcal{G}_m$ has a fully mixed state which is correlated to the output.

Since $\mathcal{G}_p$ does not contribute to the power spectrum, a globally minimal realisation is provided by $\mathcal{G}_m$

$$\Xi_m(s) = \prod_{i \notin \mathcal{P}} \frac{s + \overline{\lambda}_i}{s - \lambda_i} \tag{6.29}$$

Each fraction in (6.29) represents a bona-fide PQLS $\mathcal{G}_{m,i}$ with Hamiltonian and coupling parameters $\Omega_i = -\mathrm{Im}\lambda_i$ and $1/2|c_i|^2 = -\mathrm{Re}\lambda_i$. □

With this Theorem it is now possible to construct a globally minimal realisation of the PQLS *directly* from the power spectrum. Moreover, global minimality of PQLSs may be completely understood in terms of the spectrum of the system matrix A,

just as was the case for minimality, stability, observability and controllability [5, 17]. An immediate corollary of this is the following:

Corollary 4. *A SISO PQLS $\mathcal{G} = (C, \Omega)$, with pure input $V(N, M)$ has a pure stationary state if and only if either holds*

(1) The input is vacuum

(2) The eigenvalues of A are real or come in complex conjugate pairs.

From Theorem 13 there are two types of 'elementary' systems that are non-identifiable from the power spectrum for arbitrary input $V(N, M)$. Written in the doubled up notation, these are either:

a) one mode systems of the form $\mathcal{G}_1 = (\Delta(c, 0), 0)$

b) two mode systems of the form
$\mathcal{G}_2 = (\Delta(c, 0), \Delta(\Omega_-, 0)) \triangleleft (\Delta(c, 0), \Delta(-\Omega_-, 0))$.

The system $\mathcal{G}_2$ having trivial power spectrum could be interpreted as destructive interference between the first and the second system. That is, the first system is cancelling or absorbing the second. We discuss this idea further in Ch. 9, where we develop the notion of *quantum absorbers*.

Now it is not immediately obvious that these systems are consistent with the non-identifiable systems in Theorem 10. As an example we will show that this is indeed the case in the case for $\mathcal{G}_1$ ($\mathcal{G}_2$ is similar).

Example 12. *Consider system $\mathcal{G}_1$ for input $V(N, M)$, which has trivial power spectrum $V(N, M)$. Viewed in the vacuum basis of the field the system will be*

$$\tilde{\mathcal{G}}_1 = \left(S_{\text{in}}^{\flat} \Delta(c, 0), 0\right) \tag{6.30}$$

(see Sec. 3.1)) and the power spectrum will be vacuum. As $S^{\flat} \Delta(c_-, 0) = \Delta(c_-, 0) S^{\flat}$, it follows that $\tilde{\mathcal{G}}_1$ must be TFE to the system $(\Delta(c, 0), 0)$ in the vacuum basis. Therefore, because this system is passive, we have consistency with Theorem (10).

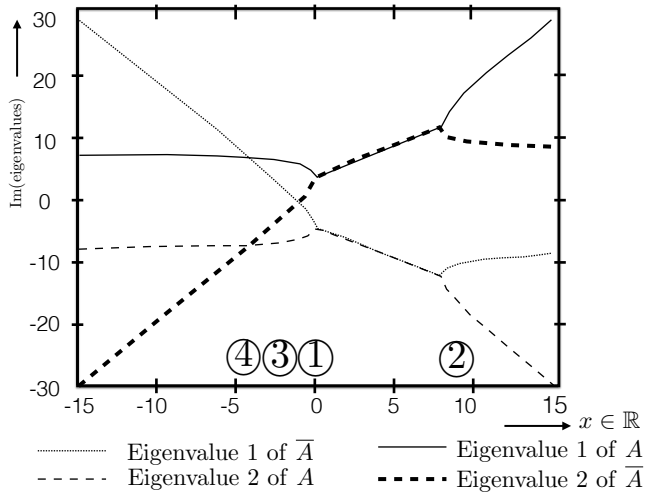

FIGURE 6.4: Eigenvalues of A and $A^\dagger$ as function of x.

In fact we can even see that (6.30) *is passive by directly computing its transfer function. One can check that*

$$\Xi_-(s) = \frac{s - |c|^2/2}{s + |c|^2/2} \text{ and } \Xi_+(s) = 0.$$

Finally, it seems that the assumption of global minimality seems to be not very restrictive; we illustrate this in the form of an example.

Example 13. *Consider the following SISO PQLS with two internal modes:*

$$\mathcal{G} = \left((0, 2\sqrt{2}), \frac{1}{2} \left(\begin{smallmatrix} 4+x & 4-x \\ 4-x & 4+x \end{smallmatrix} \right) \right),$$

where $x \in \mathbb{R}$. We examine for which values of x the system is globally minimal for squeezed inputs. One can first check that the system is minimal if and only if $x \neq 4$. In Fig. 6.4 we plot the imaginary parts of the eigenvalues of A and $A^\dagger$. By Theorem 13, the system is non-globally minimal if any of the lines representing the eigenvalues of A intersect those of $A^\dagger$. There are 4 points of interest that have been highlighted in the figure

① *$x = 0$: crossing of eigenvalues of A but not with eigenvalues of $A^\dagger$; system is globally minimal.*

② $x = 8$*: crossing of eigenvalues A but not with eigenvalues of $A^\dagger$; system is globally minimal.*

③ $x = -1$*: An eigenvalue of A coincides with one of $A^\dagger$. Therefore the dimension of the pure component is 1. This occurs when one eigenvalue is real.*

④ $x = -4$*: Both eigenvalues of A coincide with those of $A^\dagger$, and form a complex conjugate pair. Therefore the dimension of the pure space is 2.*

In summary, there were only two values of x for which the system is non-globally minimal.

The diagrammatical method used in this example is rather neat, as it not only highlights clearly whether or not a system is globally minimal but also the size of the globally minimal subsystem that is transfer function-identifiable.

6.8.2 MIMO

We now extend our understanding of global minimality to *MIMO* PQLSs. Recall from Sec. 6.4 that under global minimality PSE systems are related via a symplectic transformation on the system. Therefore, given a pure input $V(N, M)$ and a system (C, Ω) it remains to understand when it is globally minimal.

The MIMO case is more involved than the SISO case because the input correlations between channels become important, which wasn't the case for SISO. Consequently we don't get such a simple condition on the system matrix, A, determining global minimality (as in the SISO case). The information available about the system is given by the quantities

$$\Xi(-i\omega)(N^T + 1)\Xi(-i\omega)^\dagger \tag{6.31}$$

$$\Xi(-i\omega)M\Xi(i\omega)^T. \tag{6.32}$$

Note that (6.31) wasn't present in the SISO case.

We will investigate global minimality first for $n = 1$ modes, then $n = 2$ and finally for arbitrary n. The reason for doing it this way is because, as we shall see,

the non-globally minimal part turns out to be decomposable into one and two mode blocks connected in series. For $n = 1$ mode we have the following result:

Lemma 5. *A MIMO PQLS, (C, Ω), with one internal mode is non-globally minimal for field input, $V(N, M)$, if and only if either of the following conditions hold:*
(i) $\Omega = 0$ and $\left[CC^\dagger, N^T\right] = 0$ and $CC^\dagger M - M\left(CC^\dagger\right)^T = 0$, or
(ii) $CC^\dagger M = 0$

Proof. For a one-internal mode system to be non-globally minimal, its power spectrum must be trivial. This implies the following:

$$\Xi(-i\omega)N^T = N^T\Xi(-i\omega) \textbf{ and } \Xi(-i\omega)M = M\overline{\Xi(+i\omega)}$$

from (6.31) and (6.32). In particular, the second of these requires that either $CC^\dagger M = 0$ or $\Omega = 0$, otherwise the poles on the left-hand side and the right-hand side will differ. Note that if $CC^\dagger M = 0$ then $CC^\dagger M$ is also zero, hence the power spectrum is trivial. The remaining condition in case (i) follows from the thermal part of the power spectrum. □

Note that case (i) in Lemma 5 is the MIMO extension of the one mode SISO elementary system from Sec. 6.8.1. In fact, by an appropriate change of basis a one-mode MIMO system can be viewed as a one mode SISO system (with $m - 1$ ancila channels). In this basis, case (i) corresponds to an input supported only on the SISO channel, whereas case (ii) may be interpreted as an input supported only on the ancilla channels.

We have the following result for $n = 2$ modes.

Theorem 14. *A MIMO PQLS, (C, Ω), with two internal modes $(n = 2)$ is non-globally minimal for input field, $V(N, M)$, if and only if there exists a TFE cascaded system*[6]*, $\mathcal{G} = (d, \Omega_2) \triangleleft (c, \Omega_1)$, such that any of the following conditions hold:*

(1) $\Omega_2 = 0$ and $\left[dd^\dagger, N^T\right] = 0$ and $dd^\dagger M - M\left(dd^\dagger\right)^T = 0$,

[6]Note that a MIMO PQLS can always be realised as a cascade (see Sec. 5.2). For a two mode PQLS there will be two ways to reorder the modes, corresponding to reordering the elements in the Schur decomposition of the system matrix, A [74].

(2) $dd^\dagger M = 0$

(3) $\Omega_1 = -\Omega_2 \neq 0$ *and* $c^\dagger c = d^\dagger d$*, and*

$$cc^\dagger N^T = N^T cc^\dagger \quad dd^\dagger N^T = N^T dd^\dagger \quad cc^\dagger dd^\dagger N^T = N^T cc^\dagger dd^\dagger$$

.

$$cc^\dagger M = M\overline{cc^\dagger} \quad dd^\dagger M = M\overline{dd^\dagger} \quad cc^\dagger dd^\dagger M = M\overline{cc^\dagger dd^\dagger}$$

.

(4) $\Omega_1 = -\Omega_2 = 0$*, and*

$$\left(cc^\dagger + dd^\dagger\right) N^T = N^T \left(cc^\dagger + dd^\dagger\right)$$

$$\left(cc^\dagger dd^\dagger - \frac{1}{2}c^\dagger cdd^\dagger - \frac{1}{2}d^\dagger dcc^\dagger\right) N^T = N^T \left(cc^\dagger dd^\dagger - \frac{1}{2}c^\dagger cdd^\dagger - \frac{1}{2}d^\dagger dcc^\dagger\right)$$

$$\left(cc^\dagger + dd^\dagger\right) M = M\overline{(cc^\dagger + dd^\dagger)}$$

$$\left(cc^\dagger dd^\dagger - \frac{1}{2}c^\dagger cdd^\dagger - \frac{1}{2}d^\dagger dcc^\dagger\right) M = M\overline{\left(cc^\dagger dd^\dagger - \frac{1}{2}c^\dagger cdd^\dagger - \frac{1}{2}d^\dagger dcc^\dagger\right)}.$$

The proof of this theorem is given in Appendix F. Let us understand the interpretation of the conditions required for non-global minimality from Theorem 14. Firstly, case (1) and (2) are the same as Lemma 5, being one mode cancellations. Let us understand cases (3) and (4) in the following example.

Example 14. *Suppose that we have two input channels and work in the field basis where there are two independent squeezed modes (see Sec. 3.2). That is,*

$$N = \left(\begin{smallmatrix} N_1 & 0 \\ 0 & N_2 \end{smallmatrix}\right) \quad \text{and} \quad M = \left(\begin{smallmatrix} M_1 & 0 \\ 0 & M_2 \end{smallmatrix}\right).$$

Let $c = (c_1, c_2)^T$ *and* $d = (d_1, d_2)^T$ *in this diagonal basis*

Let us look at case (3). If $N_1 \neq N_2$ *then conditions (3) imply that* $c_2 = d_2 = 0$ *or* $c_1 = d_1 = 0$*. That is, we have a SISO series product of two one-mode systems satisfying the conditions of Corollary 4, and an ancilla channel. Now, if* $N_1 = N_2$*, and taking* $M_1 = M_2$ *(in general* M_1 *and* M_2 *differ by a phase, which can be undone*

by changing basis of the input), then conditions (3) imply that $cc^\dagger = dd^\dagger = \overline{cc^\dagger}$*. Therefore,* $CC^\dagger = 2cc^\dagger$ *and so* $CC^\dagger$ *is rank one. The upshot is that this system is also a SISO system with ancilla, this time viewed in a different (rotated) basis. Following this analysis we can conclude that case (3) is the MIMO analogue of the two-mode elementary SISO system from Sec. 6.8.1.*

Case (4), where $\Omega_1 = -\Omega_2 = 0$*, reduces to the following subcases:*

- $N = N_1 1$ *and taking* $M_1 = M_2$*, then* $cc^\dagger = \overline{cc^\dagger}$*,* $dd^\dagger = \overline{dd^\dagger}$*.*
- $CC^\dagger$ *is a multiple of identity and either i)*$|c_1|^2 = |d_1|^2$ *and* $|c_2|^2 = |d_2|^2$ *or ii)*$|c_2|^2 = |d_1|^2$ *and* $|c_1|^2 = |d_2|^2$*.*

The first subcase consists of two SISO one-mode cancellations, i.e the stationary state is pure and separable. The second is a concatenation of two identical single mode SISO systems. In summary in this choice of field basis where there is no entanglement between the channels, all of the cases of non-global minimality in Theorem 14 reduce to SISO cancellations (Sec. 6.8.1).

Note that in Theorem 14 and Lemma 5 we didn't use the purity assumption.

Theorem 15. *Suppose that an n mode MIMO PQLS,* (C, Ω)*, with pure input field* $V(N, M)$ *has a pure stationary state. Then there exists a TFE cascade realisation* $\mathcal{G} = (c_1, \Omega_1) \triangleleft (c_2, \Omega_2) \ldots \triangleleft (c_n, \Omega_n)$ *such that either*

- (c_1, Ω_1) *has trivial power spectrum (*$\Psi(\omega) = V$*), or*
- $(c_1, \Omega_1) \triangleleft (c_2, \Omega_2)$ *has trivial power spectrum (*$\Psi(\omega) = V$*).*

By repeating this statement iteratively, then a system, (c_i, Ω_i)*, within the cascade either has trivial power spectrum or* $(c_{i+1}, \Omega_{i+1}) \triangleleft (c_i, \Omega_i)$ *does.*

Proof. For any PQLS there exists TFE cascaded system [15]. There are two cases; either the stationary state of the first system in the cascade is pure, or it is mixed. If it is pure then case the first bullet point in the theorem follows immediately. If it is mixed case then the second bullet point follows; the proof of this requires more theory, which we postpone until Ch. 9. In particular, the proof follows as a direct application of a Theorem 20. □

This result says that a PQLS with a pure stationary state can be decomposed into smaller systems of one or two modes each with a pure stationary state, connected via the series product. Note that if there is to be a two-mode pure stationary state then this theorem says that the two modes must be adjacent in (one of) the cascade realisation(s). It also enables us to write the following corollary, which shows that determining whether or not a system is global minimality can be answered by considering only the first two modes in (every) cascade realisation.

Corollary 5. *A MIMO PQLS,* (C, Ω)*, with* n *internal modes is non-globally minimal for pure input field,* $\mathbf{V}(N, M)$*, if and only if there exists a cascade realisation,* $\mathcal{G} = (c_1, \Omega_1) \triangleleft (c_2, \Omega_2) \ldots \triangleleft (c_n, \Omega_n)$ *such on the first two modes any of the conditions in Theorem 14 hold.*

Proof. Firstly, by Theorem 8 the system may be realised as a series product of a system with a pure stationary state and one with a mixed stationary state. Applying Theorem 15 to the pure part, it can be realised as a series of one or two mode systems, each with pure stationary state. Finally, applying Theorem 14 to the first two mode system in the cascade gives the result. □

We now give an algorithm enabling one to find the globally minimal restriction of a given MIMO PQLS (c, Ω) with n internal modes. We assume that its system matrix A has discrete spectrum for simplicity,

Algorithm:

(1) Calculate the matrix A and its eigenvalues.

(2) Perform a *Schur diagonalisation*, that is, find a unitary U and lower triangular matrix A' such that $A' = UAU^\dagger$ using known algorithms. Note that the eigenvalues of A lie along the main diagonal.

(3) Check the conditions in Theorem 14 for the first two systems of the cascaded system $(C', A') := \left(CU^\dagger, UAU^\dagger\right)$. If any are satisfied, then the system is not globally minimal and that particular subsystem has a pure stationary state. If they aren't then move to step (5).

(4) Remove the non-globally minimal subsystem and repeat step (3).

(5) Repeat steps (2) and (3) with a different pair of eigenvalues in the first two slots of A' (order matters).

(6) When all orders of modes have been exhausted, **stop** and conclude that the remaining system is globally-minimal.

Remark 5. *Finding an equivalent cascade realisation of a QLS requires performing a Schur decomposition on the system matrix, A. This algorithm uses the fact that the transformation to the lower triangular matrix in the Schur diagonalization, A', is unique up to a diagonal unitary matrix for a given fixed order of elements on the main diagonal of A'.*

Example 15. *Consider the two-mode PQLS*

$$(C, A) = \left(\begin{pmatrix} -4 & 8 \\ -3 & 3 \end{pmatrix}, \begin{pmatrix} -\frac{45}{4}-2i & \frac{65}{4}+2i \\ \frac{17}{4}+2i & -\frac{73}{4}-2i \end{pmatrix} \right)$$

with input $V(N, M)$, where N, M are diagonal.

The two TFE cascade realisations of this system are those given in example 6; they correspond to the the two possible orderings of the eigenvalues in the Schur decomposition of A. Now, one can verify that the system $(\tilde{C}_2, \tilde{\Omega}_2) \triangleleft (\tilde{C}_1, \tilde{\Omega}_1)$ doesn't satisfy any of the conditions in Theorem 14. However, the system (C_1, Ω_1) in the cascaded system $(C_2, \Omega_2) \triangleleft (C_1, \Omega_1)$ satisfies condition (1) in Theorem 14. Hence the globally minimal restriction is given by (C_2, Ω_2).

6.9 Entangled Inputs

Here we show that by using an additional ancillary channel with an appropriate design of input makes it possible to identify the transfer function from the power spectrum for *all* minimal systems.

Consider the set-up in Fig. 6.5, where a pure entangled input state is fed into a QLS with m channels and concatenate with an additional m ancillary channels. We assume that the input is non-vacuum and is characterised by $V(N, M)$, which has $2m \times 2m$ blocks

$$N = \begin{pmatrix} N_1 & N_2 \\ {N_2}^\dagger & N_3 \end{pmatrix} \quad M = \begin{pmatrix} M_1 & M_2 \\ M_2^T & M_3 \end{pmatrix}.$$

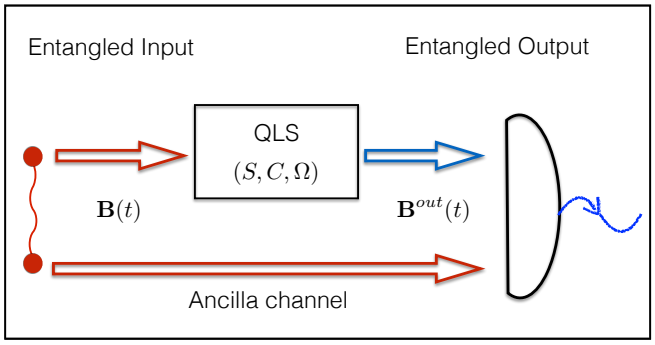

FIGURE 6.5: Entangled setup discussed in Sec. 6.9. There are two channels, which are our PQLS and an additional ancilla channel. Inputs are entangled over the two channels.

Each N_i and M_i are of size $m \times m$. The doubled-up transfer function is given (in $n \times n$ blocks) by

$$\Xi(s) = \begin{pmatrix} \Xi_-(s) & 0 & \Xi_+(s) & 0 \\ 0 & 1 & 0 & 0 \\ \Xi_+(\bar{s})^\# & 0 & \Xi_-(\bar{s})^\# & 0 \\ 0 & 0 & 0 & 1 \end{pmatrix}. \tag{6.33}$$

Now calculating the $(2,1)$ and $(1,4)$ blocks of the power spectrum using (3.22), we obtain:

$$N_2^T \Xi_-(s)^\dagger + M_2^T \Xi_+(s)^\dagger := \alpha(s)$$

and

$$\Xi_-(s) M_2 + \Xi_+(s) N_2 := \beta(s).$$

To be clear, $\alpha(s)$ and $\beta(s)$ are known at this stage from the power spectrum. Equivalently we may write these in matrix form as

$$\begin{pmatrix} \Xi_-(s) & \Xi_+(s) \end{pmatrix} \Delta(M_2, N_2^\#) = \begin{pmatrix} \beta(s) & \alpha(s)^\dagger \end{pmatrix}.$$

Hence if we choose N_2 and M_2 such that the matrix $\Delta(M_2, N_2^\#)$ is non-singular we may identify the transfer function of our system uniquely. For example, such a choice of input would be $N = x1$ and $M = \begin{pmatrix} 0 & y1_n \\ y1_n & 0 \end{pmatrix}$ with $x(x+1) = |y|^2$ (the purity assumption). As one can see there are no requirements on the actual QLS other than minimality.

Remark 6. *Recall from the previous subsections that the maximum amount of information we may obtain about a PQLS from the power spectrum without the use of ancilla is that of the restriction to its globally minimal subspace. However, we have seen here that it is possible to construct a globally minimal pair, and hence obtain the whole transfer function simply by embedding the system in a larger space. The crucial point is that we have used a different input, which matters for the power spectrum.*

From the analysis above, purity was not necessary to identify the transfer function. In fact, one didn't even require any squeezing. We investigate relaxing the assumption of purity in more detail in the next subsection.

6.10 Thermal Inputs

An interesting open question is whether the identifiability results of this chapter may be extended to mixed inputs. In this section we study identifiability for the subclass of PQLSs with mixed, and in particular thermal inputs (see Sec. 3.2). This problem is particularly interesting because neither the input nor the system require any squeezing. For simplicity, we shall assume that $S = 1$ throughout this subsection.

Consider a general PQLS, which has coupling matrix C and system Hamiltonian Ω. Suppose we probe the system with known input $V(N, 0)$ ($N \geq 0$ in order to be physical). The power spectrum of this system is

$$\Psi(s) = \begin{pmatrix} \Xi_-(s)(N^T+1)\Xi_-(-\overline{s})^\dagger & 0 \\ 0 & \overline{\Xi_-(\overline{s})}N\Xi_-(-s)^T \end{pmatrix},$$

where $\Xi_-(s) = 1 - C\,(s - A)^{-1}\,C^\dagger$ and $A = -i\Omega - \frac{1}{2}C^\dagger C$. Therefore our basic identifiability problem for the power spectrum reduces to identifiability of the quantity $\Xi_-(s)N^T\Xi_-(-\overline{s})^\dagger =: \Upsilon(s)$.

Firstly observe that if the PQLS is SISO then the power spectrum is always trivial because the transfer function is unitary. This should not be too surprising because, as the system is passive, the effect of the system on a given frequency mode is to rotate the input covariance in the $(\mathbf{X}, \mathbf{P})$ phase space. Since a one mode thermal

state is centred and circularly symmetric in phase space, such a rotation will not be visible, i.e., the input and output will appear the same. However, in the MIMO case one can choose a thermal input so that it is not symmetrical with respect to the different channels. We shall see that this allows for identifiability.

Before answering our identifiability problem for this scenario, let us consider a situation where we are free to modulate the input. That is, suppose we have access to the power spectrum for all input covariances in a small neighbourhood (rather than for a specific input). This assumption is of course quite strong, but it is still nevertheless an interesting starting point for identifiability.

Theorem 16. *Let (C_1, Ω_1) and (C_2, Ω_2) be two PQLSs which are globally minimal for all noise covariances in a neighbourhood of $V = \left(\begin{smallmatrix} N^T+1 & 0 \\ 0 & N \end{smallmatrix}\right)$. If $\Upsilon_1(s) = \Upsilon_2(s)$ for all thermal covariances V' in a neighbourhood of V, then the systems are TFE: $\Xi_1(s) = \Xi_2(s)$.*

Proof. If $\Upsilon_1(s) = \Upsilon_2(s)$ for all V' in a neighbourhood of V then $\Xi(s) = e^{\phi(s)}\Xi_2(s)$ for some $\phi(s)$. This is because knowing the action on all V' means that you know the action on all matrices. Two actions are the same if and only if $\Xi_1(s)\Xi_2(s)^\dagger$ commutes with all V', so they must differ by a phase. Finally as the transfer function is rational and monic, then the phase must be trivial. □

Now back to our original identifiability problem. Just like in Sec. 6.2, we can treat $\Upsilon(s)$ as a transfer function realised by the resultant cascaded system:

$$\left(\tilde{A}, \tilde{B}, \tilde{C}, \tilde{D}\right) := \left(\left(\begin{smallmatrix} -A^\dagger & 0 \\ C^\dagger NC & A \end{smallmatrix}\right), \left(\begin{smallmatrix} -C^\dagger \\ -C^\dagger N \end{smallmatrix}\right), \left(\begin{smallmatrix} -NC & C \end{smallmatrix}\right), N\right). \tag{6.34}$$

Notice that A has $2n$ eigenvalues, rather than $4n$, and is proper LBT (it should be understood that each block is of size $n \times n$).

Theorem 17. *Let (C_1, Ω_1) and (C_2, Ω_2) be two PQLS with minimal representations (6.34) for input $V(N, 0)$, then*

$$\Upsilon_1(s) = \Upsilon_2(s) \ for\ all\ s \quad \Leftrightarrow \quad \Xi_1(s) = \Xi_2(s) \ for\ all\ s$$

Remark 7. *Notice that unlike Theorem (11), the stable assumption is not required as stablility and minimality are equivalent for PQLSs [5].*

Proof. The proof of this statement can be obtained almost identically to that of Theorem 11. That is, by firstly using the properties of proper LBT matrices to reduces the admissible set of equivalent transformations to lower block triangular similarity transformations. We then show the following two steps

(1) Firstly,

$$\begin{pmatrix} T_4^\dagger & 0 \\ -T_3^\dagger & T_4^\dagger \end{pmatrix} T = 1.$$

(2) Finally,

$$\begin{pmatrix} T_4^\dagger - T_1^\dagger \\ -T_3^\dagger \end{pmatrix} = 0.$$

Notice that step (3) in Theorem 11 is not required. The proofs of steps (1) and (2) here are identical to those in Appendix D, except that K is now replaced with $\left(\begin{smallmatrix} 1 & 0 \\ 0 & -1 \end{smallmatrix}\right)$ and V_{vac} is replaced with N. □

This theorem says that if the cascaded system (6.34) is minimal then the transfer function of the QLS is identifiable. However, what does minimality mean here? Recall how we saw in Sec. 6.2 that minimality of the analogous cascaded system was equivalent to global minimality of the QLS (recall that we had Theorem 9). We would like to investigate whether this holds here. In fact, proving this equivalence is much trickier here because Theorem 9 was derived via an intermediate result that, i.e., that global minimality is equivalent to the system possessing a fully mixed stationary state. Such an intermediate result does not hold in the case of mixed inputs. That is, although the statement [global minimality implies (full)-mixed stationary state] is true (we do not give the proof here), the converse statement [(full)-mixed stationary state implies global minimality] no longer holds. In fact, because the term $C^\flat V \left(C^\flat\right)^\dagger > 0$ in the Lyapunov equation (6.1) (with $V(N, M)$ replaced with V_{vac}) for all mixed inputs, then it follows from [49, Theorem 3.18] that $P > 0$; hence the stationary state is always fully mixed.

Despite the problems above, can we still prove the equivalence between minimality of the cascaded system and global minimality of the PQLS? Firstly, the statement [(6.34) minimal implies (C, Ω) globally minimal] is trivial. However, we are more interested in whether the reverse statement is true. Let us now understand when this

is the case. The requirement (6.34) be minimal, entails it to be both observable and controllable.

Lemma 6. *The cascaded system* (6.34) *is observable iff it is controllable.*

Proof. Suppose that (6.34) is observable, which is equivalent to $(\tilde{A}^\dagger, \tilde{C}^\dagger)$ controllable. It therefore remains to show that $(\tilde{A}^\dagger, \tilde{C}^\dagger)$ controllable is equivalent to $(\tilde{A}, \tilde{B})$ controllable. Firstly, suppose that $(\tilde{A}^\dagger, \tilde{C}^\dagger)$ is controllable. This is equivalent to the statement: for any (left)-eigenvector and eigenvalue, X, λ, of $\tilde{A}^\dagger$, then $X\tilde{C}^\dagger \neq 0$. Equivalently,

$$\begin{pmatrix} X_1 & X_2 \end{pmatrix} \begin{pmatrix} -A & C^\dagger NC \\ 0 & A^\dagger \end{pmatrix} = \lambda \begin{pmatrix} X_1 & X_2 \end{pmatrix} \text{ implies } -X_1 C^\dagger N + X_2 C^\dagger \neq 0.$$

This in turn is equivalent to the statement:

$$\begin{pmatrix} X_2 & -X_1 \end{pmatrix} \begin{pmatrix} -A^\dagger & 0 \\ C^\dagger NC & A \end{pmatrix} = \lambda \begin{pmatrix} X_2 & -X_1 \end{pmatrix} \text{ implies } X_2 C^\dagger + (-X_1) C^\dagger N \neq 0,$$

which is equivalent to $(\tilde{A}, \tilde{B})$ controllable. □

In light of Lemma 6, understanding when (6.34) is minimal reduces to understanding when (6.6) is observable. Observability is equivalent to the statement: "for any eigenvector and eigenvalues y, λ of $\tilde{A}$, then $\tilde{C}y \neq 0$". Therefore, by using the definition of $\tilde{A}$ and $\tilde{C}$ above, the system being not observable reduces to the following cases:

(1) There exists a pair of (right)-eigenvectors of $A^\dagger$, y_1, y_2, with the same eigenvalue such that

$$NCy_1 = Cy_2$$

and $Cy_1 \neq 0$.

(2) There exists a (right)-eigenvalue $\binom{0}{y}$ of $A^\dagger$, where y is of size n such that $Cy \neq 0$.

The second case may be excluded if one assumes our system (C, Ω) is minimal. Let us assume for simplicity that the eigenvalues of $\tilde{A}$ are distinct so that in case (1) above we must have $y_1 = \mu y_2$ for some $\mu \neq 0$. Therefore, Cy_1 is an eigenvector

of N and must necessarily have a real eigenvalue (as $N \geq 0$). In summary, for the cascaded system to be non-observable the minimal system (A, C) must have an input N such that one of the eigenvectors of $A^\dagger$, y_1, is such that Cy_1 is an eigenvector of N. This condition is quite generic. Moreover, it can be shown that when this non-observability condition holds, then the system is non-globally minimal (see Appendix G). Therefore, when A has distinct eigenvalues global minimality implies identifiability, which extends Theorem (11) to this subclass of mixed inputs.

The interpretation of the non-identifiable (sub-)systems (2) can be seen to be essentially a SISO system viewed in a different field basis. In this canonical basis the inputs also must not be entangled, otherwise the system would be identifiable as in Sec. 6.9. Hence these systems are non-identifiable due to the perfect symmetry of the input.

6.11 Quantum Fisher Information

We now find an explicit expression for the QFI at stationarity and show that if one assumes global minimality, the zeros of it exactly correspond to the set of gauge transformation of the power spectrum that we saw in Theorem 11. The proof of Theorem 11 was obtained by using mainly classical system theoretic concepts; the results here give an alternative proof, this time using quantum mechanical arguments.

Throughout this section we work with the raw (pure) field input, rather than performing the trick in Sec. 6.1 and treating the field as vacuum. The reason for this is that we shall be working with stochastic integrals in the following, where one must a little careful performing static squeezing operations on the field [11].

6.11.1 Preliminaries

We need a few preliminaries in this section. First of all denote the Heisenberg evolved system operator by $j_t(\mathbf{X}) = \mathbf{U}^\dagger(t)\,(\mathbf{X} \otimes \mathbb{1}_{\text{field}})\,\mathbf{U}(t)$. It follows that $j_t(\mathbf{X})$ satisfies the QSDE

$$dj_t(\mathbf{X}) = \sum_i \left(j_t\left([\mathbf{X}, \mathbf{L}_i]\right) d\mathbf{B}_i^\dagger(t) + j_t\left(\left[\mathbf{L}_i^\dagger, \mathbf{X}\right]\right) d\mathbf{B}_i(t) \right) + j_t(\mathcal{L}(\mathbf{X})),$$

where $\mathcal{L}(\cdot) = -i[(\cdot), \mathbf{H}] + \sum_i \left(\mathbf{L}_i^\dagger(\cdot)\mathbf{L}_i - \frac{1}{2}\mathbf{L}_i^\dagger\mathbf{L}_i(\cdot) - \frac{1}{2}(\cdot)\mathbf{L}_i^\dagger\mathbf{L}_i\right)$ is called the *Lindblad generator* and $\mathbf{L}_i$ are the elements of the coupling operator (3.7). Also, define $T_t(\mathbf{X}) := \langle\xi|j_t(\mathbf{X})|\xi\rangle$, which is the Heisenberg evolution of $\mathbf{X}$ restricted to the system. The operator $T_t(\mathbf{X})$ satisfies the following properties [42, 95]:

- Firstly, $dT_t(\mathbf{X}) = T_t(\mathcal{L}(\mathbf{X}))$ and so $T_t(\cdot)$ is a completely positive trace preserving semigroup with generator $\mathcal{L}(\cdot)$.
- Also, $\lim_{t\to\infty} T_t(\mathbf{X}) = \lim_{t\to\infty} \frac{1}{t}\int_0^t T_s(\mathbf{X})ds = \langle\mathbf{X}\rangle_{\rho_{ss}} \mathbb{1}$, where ρ_{ss} is the stationary state of the system and $\langle\cdot\rangle_{\rho_{ss}}$ is the (quantum) expectation on the system with respect to the state ρ_{ss}.

We can also calculate the evolution of the operators $T_t(\breve{\mathbf{a}})$ and $T_t(\breve{\mathbf{a}}^\dagger X\breve{\mathbf{a}})$ for some matrix X. Firstly, from Eq. (3.14) the Heisenberg system evolution for the system operator $\breve{\mathbf{a}}$ has solution $T_t(\breve{\mathbf{a}}) = e^{At}\breve{\mathbf{a}}$. Notice that $\lim_{t\to\infty} T_t(\breve{\mathbf{a}}) = 0$, as the system is assumed to be Hurwitz. Also, it follows from the Ito rules (see Appendix H) that

$$\begin{aligned} dT_t(\breve{\mathbf{a}}^\dagger X\breve{\mathbf{a}}) &= \langle\xi|\,|\breve{\mathbf{a}}^\dagger(t)X\left(A\breve{\mathbf{a}}(t)dt\,|\xi\rangle - C^b d\mathbf{B}(t)\,|\xi\rangle\right) \\ &\quad + \left(\langle\xi|\,\breve{\mathbf{a}}^\dagger(t)A^\dagger dt - \langle\xi|\,C^\# d\breve{\mathbf{B}}^\dagger(t)\right)A\breve{\mathbf{a}}(t)\,|\xi\rangle + J(t)\mathbb{1}dt \\ &= \langle\xi|\,\breve{\mathbf{a}}^\dagger(t)\left(XA + A^\dagger X\right)\breve{\mathbf{a}}(t)\,|\xi\rangle\,dt + J(t)\mathbb{1}dt, \end{aligned}$$

for some matrix $J(t)$, which we do not specify here. Therefore

$$T_t(\breve{\mathbf{a}}^\dagger X\breve{\mathbf{a}}) = \breve{\mathbf{a}}^\dagger e^{A^\dagger t}Xe^{At}\breve{\mathbf{a}} + K(t)\mathbb{1} \tag{6.35}$$

for some $K(t)$. The particular form of $K(t)$ is not important, but just observe that $\lim_{t\to\infty} K(t) = \left\langle\breve{\mathbf{a}}^\dagger X\breve{\mathbf{a}}\right\rangle_{\rho_{ss}}$.

6.11.2 QFI Calculation

We consider a quantum statistical model over a parameter space $\Theta \in \mathbb{C}$, which is a family of QLSs $(C_\theta, \Omega_\theta)$ indexed by an unknown parameter $\theta \in \Theta$. We denote the dependence on θ in the unitary operator $\mathbf{U}(t)$ by $\mathbf{U}_\theta(t)$. Recall from Ch. 4 that the most information that one can hope to obtain from any measurement is given by the

quantum Fisher information (QFI). In this subsection we calculate the QFI for our QLS in the stationary approach. We assume for the moment that we have full access to the (pure) output state, which is given by $|\psi_\theta(t)\rangle := \mathbf{U}_\theta(t)\,|\phi \otimes \xi\rangle$ where $|\phi\rangle$ is the initial state of the system, $|\xi\rangle$ is the pure (stationary) input corresponding to $V(N, M)$ on the field and $\mathbf{U}_\theta(t)$ is the unitary operator describing the joint evolution of the system and field (see Eq. (3.8)). Note that the reduced state of the field, $\rho^{\text{out}}(t)$, may be obtained by taking the partial trace:

$$\rho^{\text{out}}(t) = \text{Tr}_{sys}\left(|\psi_\theta(t)\rangle\langle\psi_\theta(t)|\right).$$

Theorem 18. *The QFI for pure state $\mathbf{U}_\theta(t)\,|\phi \otimes \xi\rangle$ scales linearly with time, with asymptotic rate constant:*

$$f_\theta := \lim_{t\to\infty} \frac{F_\theta}{t}.$$

Moreover, the QFI rate is given by

$$f_\theta = 4\sum_{i=1}^{m} \left\langle \left(\dot{\tilde{\mathbf{L}}}_i - i\left[\tilde{\mathbf{L}}_i, \mathbf{W}\right]\right)^\dagger \left(\dot{\tilde{\mathbf{L}}}_i - i\left[\tilde{\mathbf{L}}_i, \mathbf{W}\right]\right)\right\rangle_{\rho_{ss}} \tag{6.36}$$

where $\langle\cdot\rangle_{\rho_{ss}}$ is the quantum expectation of the system at stationary state ρ_{ss} and

$$\mathbf{W} := \int_0^\infty T_s(\mathbf{R}_0)\mathrm{d}s,$$

$$\mathbf{R}_0 := \dot{\mathbf{H}} + \text{Im}\sum_{i=1}^{m} \dot{\tilde{\mathbf{L}}}_i^\dagger \tilde{\mathbf{L}}_i - \left\langle \dot{\mathbf{H}} + \text{Im}\sum_{i=1}^{m} \dot{\tilde{\mathbf{L}}}_i^\dagger \tilde{\mathbf{L}}_i \right\rangle_{\rho_{ss}} \mathbb{1}$$

for modified coupling operator $\tilde{\mathbf{L}} := \sqrt{N^T+1}\mathbf{L} - \left(\sqrt{N^T+1}\right)^{-1} M\mathbf{L}^\#$. Note that by definition $\mathbf{R}_0$ is hermitian.

The proof of this theorem follows the same method as the proof for non-linear systems from [42] and is given in Appendix H. The reader may have noticed that so far we have assumed access to both system and field. Typically, in QLS theory we are of course only allowed access to the field. So the result is actually weaker than we require. However, we can argue that Eq. (6.36) represents the QFI for the field only

because as the system reaches stationarity, the rate at which information content is extracted from the system goes to zero, which is evidenced by the fact that power spectrum contains no terms from the system. This of course is not a proof; to prove that Eq. (6.36) represents the QFI for the field only we can employ the following argument: consider the joint system-output state $|\psi_\theta(t)\rangle$ as above. By performing a *Gaussian Schmidt Decomposition* [70], we can write

$$|\psi_\theta(t)\rangle = \sum_i \sqrt{\lambda_i}\, |\phi_i\rangle \otimes |\eta_i^{out}(t)\rangle\,,$$

where $|\eta_i^{out}(t)\rangle$ and $|\phi_i\rangle$ represent eigenbases of states of the output and stationary state, respectively (see Fig. 6.1). The output components $|\eta_i^{out}(t)\rangle$ are orthogonal (approximately, for large times) and their mixture is the output state. The proof that they are almost orthogonal should follow from the gap properties of the coupling operator $\mathbf{L}$ (or equivalently the eigenvalues of the system matrix A), but we do not have this yet. However, it has been proven in [42] for the non-linear setup, so we expect it to hold here too. The fact that the $|\eta_i^{out}(t)\rangle$ are almost orthogonal (even when you take different local parameters) means that you can distinguish them in the output without destroying the pure state $|\eta_i^{out}(t)\rangle$. Then each of these components has QFI with rate given by (6.36) and we are back in the case where we had access to the system and output.

We are now in a position to prove the claim at the beginning of this section.

6.11.3 Unidentifiable Directions in the Tangent Space

Theorem 19. *If a one-dimensional family of QLSs $(C_\theta, \Omega_\theta)$ has QFI equal to zero, then the components of the tangent vector $\mathcal{T} := (\dot{C}_\theta, \dot{\Omega}_\theta)$ satisfy*

$$\dot{C}_\theta = -iC_\theta JR \;\text{ and }\; \dot{A}_\theta = i\,[JR, A_\theta] \tag{6.37}$$

where R is some Hermitian matrix of the form

$$R = \begin{pmatrix} R_1 & R_2 \\ R_2^\dagger & R_1^T \end{pmatrix},$$

with $R_1 = R_1^\dagger$ *and* $R_2 = R_2^T$ *[96].*

Proof. The reverse implication can be straightforwardly verified, so it remains to prove the forward implication. We drop the subscript θ for ease of notation.

Firstly, as the system is globally minimal ρ_{ss} must be of full rank, the zero QFI rate implies

$$\dot{\tilde{\mathbf{L}}}_i = i\left[\tilde{\mathbf{L}}_i, \left(\int_0^\infty T_s(\mathbf{R}_0)\right)\right] \tag{6.38}$$

or all i.

Now, let us calculate $\mathbf{W} = \int_0^\infty T_s(\mathbf{R}_0)ds$. We can write $\mathbf{R}_0$ as

$$\mathbf{R}_0 = \breve{\mathbf{a}}^\dagger X \breve{\mathbf{a}} - \left\langle \breve{\mathbf{a}}^\dagger X \breve{\mathbf{a}} \right\rangle_{\rho_{ss}} \mathbb{1},$$

where the hermitian matrix X is given by

$$X = \Delta\left(\frac{\dot{\Omega}_-}{2} + \frac{1}{4i}\left(\left(\dot{C}_-^\dagger C_- - C_-^\dagger \dot{C}_-\right) + \left(\dot{C}_+^\dagger C_+ - C_+^\dagger \dot{C}_+\right)^T\right),\right.$$
$$\left.\frac{\dot{\Omega}_+}{2} + \frac{1}{4i}\left(\left(\dot{C}_-^\dagger C_+ - C_-^\dagger \dot{C}_+\right) + \left(\dot{C}_-^\dagger C_+ - C_-^\dagger \dot{C}_+\right)^T\right)\right).$$

Note that here and in the following C_- and C_+ are the modified coupling coefficients (i.e. $\tilde{\mathbf{L}} = C_-\mathbf{a} + C_+\mathbf{a}^\dagger$). In fact one can easily verify that $X = \frac{\dot{\Omega}}{2} + \frac{1}{2}\mathrm{Im}\left(\dot{C}^\dagger J C\right)$. Using (6.35) we can show that

$$\begin{aligned} T_t(\mathbf{R}_0) &= T_t(\mathbf{R}) - \left\langle \breve{\mathbf{a}}^\dagger X \breve{\mathbf{a}} \right\rangle_{\rho_{ss}} \mathbb{1} \\ &= \breve{\mathbf{a}}^\dagger e^{A^\dagger t} X e^{At} \breve{\mathbf{a}} + \left\langle \breve{\mathbf{a}}^\dagger X \breve{\mathbf{a}} \right\rangle_{\rho_{ss}} \mathbb{1} - \left\langle \breve{\mathbf{a}}^\dagger X \breve{\mathbf{a}} \right\rangle_{\rho_{ss}} \mathbb{1} \\ &= \breve{\mathbf{a}}^\dagger e^{A^\dagger t} X e^{At} \breve{\mathbf{a}}. \end{aligned}$$

The second line follows if t is taken to be sufficiently large, which is a valid assumption as we are working at stationarity. Notice that one is not required to calculate the stationary mean here. Hence,

$$\int_0^\infty T_s(\mathbf{R})ds = \breve{\mathbf{a}}^\dagger \left(\int_0^\infty e^{A^\dagger t} X e^{At} dt\right) \breve{\mathbf{a}} := \breve{\mathbf{a}}^\dagger B \breve{\mathbf{a}} \tag{6.39}$$

Observe that B satisfies the properties of a local symplectic transformation (i.e it is hermitian and doubled-up (see (6.37)) because X does.

Now $\mathbf{L}_i = C_{-_i}\mathbf{a} + C_{+_i}\mathbf{a}^\dagger$ where $C_{\pm_i}$ is the ith row of $C_\pm$. Define the following matrix

$$C_i = \begin{pmatrix} C_{-_i} & C_{+_i} \\ C^{\#}_{+_i} & C^{\#}_{-_i} \end{pmatrix},$$

which describes the coupling to the ith field. Now from Eq. (6.38), by calculating the RHS and equating coefficients of $\mathbf{a}$ and $\mathbf{a}^\dagger$, it follows that

$$\dot{C}_i = -iC_i J2B,$$

hence

$$\dot{C} = -iCJ2B. \tag{6.40}$$

Eq. (6.40) is the desired gauge transformation on the coupling matrix.

To find the Hamiltonian relation, consider $B = \int_0^\infty e^{A^\dagger t} X e^{At}$. This is formally equivalent to the Lyapunov equation [38]:

$$A^\dagger B + BA + X = 0. \tag{6.41}$$

As $A = -iJ\Omega - \frac{1}{2}JC^\dagger JC$, it follows that $A^\dagger = -JAJ - C^\dagger CJ$. Thus taking the Lyapunov equation (6.41) and multiplying by J one obtains

$$\begin{aligned} 0 &= JA^\dagger B + JBA + JX \\ &= [JB, A] - JC^\dagger JCJB + JX \\ &= [JB, A] + \frac{i}{2}\dot{A}. \end{aligned}$$

The last step here is understood by using the substitution $\dot{C} = -iCJ2B$ into $JX = \frac{1}{2}J\dot{\Omega} + \frac{1}{2}\mathrm{Im}\left(J\dot{C}^\dagger JC\right)$. Hence

$$\dot{A} = i\left[J2B, A\right] \tag{6.42}$$

as required.

Remark 8. *Eq.* (6.40) *is written in terms of the modified coupling matrix. One can obtain the result for the unmodified coupling matrix by multiplying both sides of* (6.40) *by* $S^\flat$ *(defined in Eq.* (3.4)*). As the input is independent of any unknown parameter, the result will be the same as in the modified situation.*

□

Hence the infinitesimal *gauge transformations* (6.37) are indistinguishable from any measurement of the field. Notice that these transformations can be generated from the unidentifiable transformations, $C \mapsto CS^\flat, \Omega \mapsto S\Omega S^\flat$. Therefore, this result says that the infinitesimal transformations in tangent space given by zero QFI rate, are exactly those generated by the unidentifiable symplectic transformations in Theorem 11.

Remark 9. *Notice that the transformations* (6.37)*, which have been derived directly from unidentifiable directions in the QFI, don't leave the system unchanged. This further justifies our argument that equation* (6.36) *is the quantum Fisher information rate for the field only (and not the field and system).*

6.11.4 Equivalent Expressions for the QFI in the Stationary Approach

The following expression for the QFI rate can be derived from (6.36):

$$f_{\theta|\text{time}} = 4\mathbb{E}_{\rho_{ss}}\left[\check{\mathbf{a}}^\dagger D^\dagger J V(N,M) J D \check{\mathbf{a}}\right], \tag{6.43}$$

where $D := \dot{C} - iCJ2B$ with B as in eq. (6.39). Notice that $D = 0$ corresponds to the unidentifiable directions in Theorem 19. We denote the QFI rate here by $f_{\theta|\text{time}}$ to signify that it was derived from the time-domain.

We can also obtain an expression for the QFI in the frequency domain. Since all frequency modes are independent at stationarity, the QFI per unit time is given by the following Parseval's theorem type result:

$$f_{\theta|\text{freq}} = \frac{1}{2\pi}\int_{-\infty}^{\infty} f_\theta(\omega) d\omega, \tag{6.44}$$

where $f_\theta(\omega)$ is the QFI per unit time in frequency ω, i.e., the QFI of the Gaussian state with covariance matrix $\Psi(\omega)$. To obtain the QFI rate on frequency ω, we use the known Gaussian state result [97], which gives the QFI in terms of its moments:

$$f_\theta(\omega) = -\frac{1}{4}\mathrm{Tr}\left(J\dot{\Psi}(\omega)J\dot{\Psi}(\omega)\right). \tag{6.45}$$

Clearly (6.43) and (6.44) must be equivalent. We show this in an example.

Example 16. *Consider the SISO quantum cavity as in example 1, parameterised by (passive) coupling $c \in \mathbb{R}$ and Hamiltonian Ω and suppose that we would like to estimate Ω.*

First let us calculate $f_{\Omega|time}$ at $\Omega = 0$. In this case $D|_{\theta=0}$ is given by $D = i/c$. Also, the covariance of the stationary state of the system, $P := \mathbb{E}_{\rho_{ss}}\left[\breve{\mathbf{a}}\breve{\mathbf{a}}^\dagger\right]$, can be obtained from the Lyapunov equation (6.1). It turns out that $P = V(N, M)$ at $\theta = 0$. Notice that the stationary state of the system in this case is pure because at $\theta = 0$ the system is no longer globally minimal (see Theorem 13). Therefore,

$$f_{\Omega=0|\mathrm{time}} = \frac{16N(N+1)}{c^2}$$

(where we have use the purity condition $N(N+1) = |M|^2$ here).

On the other hand we can calculate $f_{\Omega=0|freq}$. It is a simple exercise to obtain

$$f_{\Omega=0|\mathrm{freq}} = \frac{N(N+1)}{\sqrt{2\pi}}\int_{-\infty}^{\infty}\frac{8c^4}{\left(\omega^2+\frac{1}{4}c^4\right)^2}d\omega.$$

Finally, by performing the change of variables $\omega = \frac{1}{2}\tan\alpha$ or otherwise, we obtain $f_{\Omega=0|freq} = \frac{16N(N+1)}{c^2}$.

6.12 Conclusion

Our main result is that under global minimality and pure stationary inputs the power spectrum contains as much information as the transfer function, i.e., their classes of equivalent systems are the same in both functions. Therefore, no information is lost by utilising stationary inputs rather than time-dependent inputs. It is interesting

to note that this equivalence between the power spectrum and transfer function is a consequence of the unitarity and purity of the input state, and does not hold for general CLSs ([44, 47]).

We also extended these results to a class of mixed inputs, that is, thermal inputs for PQLSs. Identifiability in the case of general mixed input states (for general QLSs) remains an open question. The difficulty arises due to the failure of the [fully mixed stationary state $\iff$ globally minimal] result. Nevertheless, we expect that the transfer function can be recovered uniquely from the power spectrum generally. Not only does our analysis with thermal states for PQLSs supports this, but also because the inputs here are mixtures of pure states, on which the result holds. This problem will be a focus for us in future works.

Given that we now understand what is identifiable, the next step is to understand how well parameters can be estimated. This requires a two step approach. Firstly, one finds the best input state giving the largest QFI in (6.43) or (6.44) in terms of some resource (e.g. time or energy). Secondly, is there a simple measurement choice that enables one to attain the optimal estimation precision from the QFI? In these problems there could be one or many unknown parameters. We discuss one such estimation problem in Sec. 8.

Lastly, it would be interesting to consider these identifiability problems in the more realistic scenario of noisy QLSs. That is the analogous problem to the one in Sec. 5.5 for time-dependent inputs.

Chapter 7

Quantum Enhanced Estimation of PQLSs

The goal of this chapter is to understand how well we can estimate the parameters governing the dynamics in a PQLSs. We consider the time-dependent approach in this chapter (see Sec. (3.7.1)). The first crucial question that one must ascertain before any statistical estimation can begin, is to understand what one could possibly hope to identify. We saw in Sec. 5.1 that two minimal systems with parameters (Ω, C, S) and (Ω', C', S') are equivalent if and only if their parameters are related by a unitary transformation, i.e. $C' = CT$ and $\Omega' = T\Omega T^\dagger$ for some $n \times n$ unitary matrix T, and $S = S'$. Therefore, without any additional information, we can only identify the equivalence class of systems related by a unitary transformation as above. We consider now that some prior information is available, which is encoded in a parametrisation $\theta \to (\Omega_\theta, C_\theta, S_\theta)$ in terms of an unknown parameter $\theta \in \Theta \subset \mathbb{R}^d$. Under this assumption, the system is identifiable if each equivalence class contains at most one element $(\Omega_\theta, C_\theta, S_\theta)$ of the model (see Definition 8).

Our objective reduces to performing a measurement on the output and finding an estimator $\hat{\theta}$ of θ based on the measurement outcome. The optimization is two-fold; over the choice of input state and the measurement. We identify three properties that are desirable for a 'good' probe states and measurements pairs:

(1) Realistic states: the input states can be prepared with current technology;

(2) Sensitivity: the input states are sensitive to the change θ;

(3) Simple measurements: The scaling from (ii) may be achieved with realistic output measurements.

The setup is similar to the standard quantum metrology setup (see Sec. 4.2), where one also has access to an input and performs measurements on the output to infer information about the black-box. However, the added difficulty in our setup is that we work in continuous time and therefore the output quantum signal can be measured to produce a (continuous) classical stochastic process, whereas in traditional quantum metrology one works in discrete time. This requires a different analysis of the behaviour [51]. As a consequence, the theory of *quantum enhanced system identification* has not yet been fully developed. The purpose of chapter is to strive towards this by building on the results of [5].

In the first half of this chapter (Sec. 7.1) we provide a realistic scheme to identify a *single* unknown parameter of a PQLS at the Heisenberg limit. We consider an interferometric approach, where the essential idea is to detect an unknown variation between two almost identical systems. The technique used here is the same as that used to detect gravitational waves [53, 54]. We show that it is possible to achieve optimal scaling using squeezed input states in terms of the *quantum Fisher-information* [98]. The action of the interferometer is to displace a squeezed state by an amount proportional to the unknown parameter in a known direction in quadrature phase space. Then performing a simple homodyne measurement of this quadrature provides an estimate of the unknown parameter at the fundamental limit. The scheme is physically realistic as those non-classical states may be prepared with current technology. A physical example of a MIMO PQLS is given for estimating entanglement in two atomic ensembles.

In Sec. 7.2 we consider the multiple parameter problem. The optimal states in the single parameter case in terms of fixed photon number are (shown to be) of a single frequency. However, for SISO multi-parametric models the situation is more complicated as it is impossible to identify more than one parameter using a monochromatic input state. We discuss how to extend the interferometric approach using squeezed-coherent states to the case of multiple parameters. We see that Heisenberg scaling is also possible in this case and a simple measurement presents itself, which again comes down to detecting an unknown displacement in a known

direction using homodyne measurements. We also show that a result from [99], i.e., that there is an $\mathcal{O}(d)$ enhancement to be had for states with a fixed number of photons by estimating the multiple parameters using entangled states, can be extended to SISO PQLSs, Here, d is the number of parameters.

7.1 Quantum Enhanced Estimation of PQLSs; Single Parameter Estimation

In this section let $(S, C, \Omega) = (S_\theta, C_\theta, \Omega_\theta)$ be a PQLS, whose dynamics depend on a one-dimensional parameter $\theta \in \mathbb{R}$. We describe the estimation precision for several choices of input state.

7.1.1 Previous Results for PQLSs

Product States

Suppose that the input is given by a pure state $|\psi\rangle$, and the energy is approximately spread over a finite number of frequencies, $\omega_1, \ldots, \omega_p$ so that $|\psi\rangle$ can be represented as a tensor product over the chosen frequency modes (all other modes are in the vacuum state):

$$|\psi\rangle = |\psi_1; \omega_1\rangle \otimes |\psi_2; \omega_2\rangle \otimes \cdots \otimes |\psi_p; \omega_p\rangle \,, \tag{7.1}$$

subject to the energy constraint

$$E = \sum_{i=1}^{p} \left\langle \psi_i; \omega_i \,\middle|\, \mathbf{b}^\dagger(\omega_i)\mathbf{b}(\omega_i) \,\middle|\, \psi_i; \omega_i \right\rangle . \tag{7.2}$$

Due to linearity, each input frequency mode is affected by the PQLS independently of the others. Considering the optimization over input state first, the objective is to find a state with a large QFI, which will provide a low QCRB for the mean square error. Since the QFI is additive for product states, it follows that $I(\theta) = \sum_{i=1}^{p} I_i(\theta)$, where $I_i(\theta)$ is the QFI for frequency ω_i. Combining these facts, it follows that for one-dimensional parameter and product input states, the optimal input

is a monochromatic signal. Note that the optimal frequency may depend on the unknown parameter. In practice one could use an adaptive procedure to tune the input frequency in order to obtain better estimation precision [38]. Based on this argument, we can ignore the optimal frequency's dependence on θ in the limit of large input energies.

Example 17 (Coherent state input [5])**.** *Suppose that we probe the system with a (monochromatic) coherent state of amplitude $\alpha \in \mathbb{C}^m$ and frequency ω, i.e. $|\psi\rangle = |\alpha;\omega\rangle$, with energy, E, given by $E = \|\alpha\|^2$. The output state is obtained by rotating the amplitude vector α by the θ-dependent transfer function, i.e. it is the coherent state $|\Xi_\theta(-i\omega)\alpha;\omega\rangle$. Using Eq. (4.5), it follows that the QFI is given by [5]*

$$F(\theta|\alpha) = \left\| \frac{d\Xi_\theta(-i\omega)}{d\theta}\alpha \right\|^2 . \tag{7.3}$$

This is maximized when α is the eigenvector of the selfadjoint operator $L(\omega,\theta) := i\Xi_\theta^*(-i\omega)\cdot \mathrm{d}\Xi_\theta(-i\omega)/\mathrm{d}\theta$ whose eigenvalue has the largest absolute value. Thus the optimum QFI over frequencies and coherent amplitudes is

$$F(\theta) = E \cdot \sup_\omega \|L(\omega,\theta)\|^2 .$$

Since the QFI scales linearly in E, this is the standard scaling or "shot noise" regime. Furthermore, it can be shown that by measuring an appropriate output quadrature one can achieve the above scaling for the optimal frequency, essentially by following the techniques of [100].

Non-Gaussian States.

We now replace the coherent state of the previous example by more general state supported by a single monochromatic input mode of frequency ω. In the space of input modes $\mathbb{C}^m$ we choose the mode corresponding to the eigenvalue of $L(\omega,\theta)$ with the largest absolute value. We prepare this mode in a "cat state" [101] , i.e. a

coherent superposition of Fock states of energy E

$$|CAT;\omega\rangle := \frac{|0;\omega\rangle + |N;\omega\rangle}{\sqrt{2}}, \qquad N = 2E$$

The QFI is [5]

$$F(\theta) = 4E^2 \cdot \|L(\omega,\theta)\|^2 ,$$

which exhibits a *quadratic or Heisenberg scaling* in energy. Therefore these states are optimal for monochromatic inputs with a fixed number of photons. There are several (physical and mathematical) problems associated with this choice of input states. Firstly, it is not clear how to achieve the Heisenberg scaling with a realistic measurement. Secondly, the output signal has a period of $2\pi/N$ with respect to θ. A consequence of this is that one will only be able to determine the phase modulo $2\pi/N$. In order for the result to be unambiguous, it would appear that the phase must already be localised within a $2\pi/N$ interval beforehand (i.e. the variance of the prior distribution is of order $\mathcal{O}(1/N^2)$). This situation may be resolved by adaptive procedures based on varying the number of photons in the input state [102]. Finally, these highly non-classical states are difficult to create in practice; with present technology they are limited to very small N [103].

Interferometric Approach

We now briefly discuss an alternative setup to the one in Sec. 7.1.1 for the standard metrology protocol, as it will be useful for our estimation method. Consider the setup in Fig. 7.1 where we estimate the phase difference between the two arms of the interferometer. For a fixed number of particles N, the optimal states to use are *N00N states* [91] for which the QCRB reaches the fundamental limit on precision given by the Heisenberg limit $1/N^2$. Moreover, it can be shown that the QCRB is attained by performing photon counting measurements [102]. Just like "cat states", the N00N states have a large QFI is because of the large number variance between the two interferometer modes, but are similarly difficult to prepare in practice.

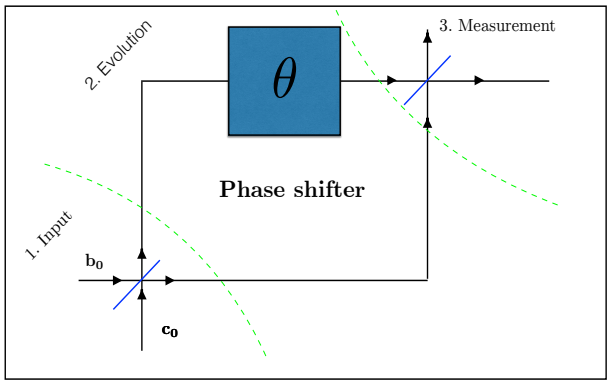

FIGURE 7.1: This figure shows the quantum metrology interferometric set-up. Two input channels are fed into the interferometer, acquiring a phase difference between the two beam-splitters. This phase difference is the result of a SISO PQLS. There are three stages to the interferometer, an input stage, an evolution stage and a measurement stage.

States Entangled in the Frequency Domain?

Let us discuss briefly the possibility of using input states entangled over many frequencies. We have seen above that monochromatic states are optimal for coherent inputs. In Appendix I we argue for fixed photon input states that there is little advantage in considering frequency-entangled inputs. Based on this evidence and the fact that this paper focuses on realistic metrology, we will assume that all inputs are monochromatic for one parameter models. Clearly, multiple frequencies must be considered in finding optimal states in the multi-parameter case (cf. Sec. 7.2).

Indefinite Photon-Number States

Here we consider using indefinite photon-number states [104] as a resource for quantum metrology. The difference with the above is that we fix only the average photon number (or equivalently average energy) rather than demand that photon number is fixed.

7.1.2 Estimation of a One-Dimensional Parameter in a PQLS

In this section we will describe an interferometric approach for identifying the unknown parameter in our system $(S_\theta, C_\theta, \Omega_\theta)$. Crucially our choice of input state will have all of the desirable features suggested above. The scheme is inspired by a phase estimation scheme proposed in [52]. We will show that the performance of these states in terms of sensitivity are as good as the best fixed particle number strategy (N00N states). We first treat the case of SISO systems after which we extend to the case of MIMO systems.

The SISO Case

Consider the interferometric setup as in Sec. 7.1.1, where we have replaced the standard phase shifter with our SISO PQLS $(S_\theta, C_\theta, \Omega_\theta)$. Consider also feeding two (quasi)-monochromatic light pulses of frequency ω into the input channels, whose frequency-domain modes are denoted by $\mathbf{b}_0$ and $\mathbf{c}_0$; the first pulse is a coherent state $|\alpha\rangle = \exp(i(\alpha\mathbf{c}_0 + \bar{\alpha}\mathbf{c}_0^*)|\Omega\rangle$ of amplitude $\alpha := |\alpha|e^{i\psi} \in \mathbb{C}$ while the second is a squeezed state $|S_r^\phi\rangle := \exp(i\phi\mathbf{b}_0^*\mathbf{b}_0)\exp(r(\mathbf{b}_0^2 - \mathbf{b}_0^{*2})/2)|\Omega\rangle$, where ϕ and r represent the angle and respectively magnitude of squeezing. The (average) energy of the input is given by $E := \langle S_r^\phi|\mathbf{b}_0^*\mathbf{b}_0|S_r^\phi\rangle + \langle\alpha|\mathbf{c}_0^*\mathbf{c}_0|\alpha\rangle = \sinh^2(r) + |\alpha|^2$.

Remark 10. *It can be seen [90, 105] that the Nth-particle component of the output of the first beam splitter for these squeezed/ coherent input states have a very large N00N component, which is essentially why they turn out to be so advantageous for quantum metrology.*

Firstly, these states are physically realistic. The creation and use of such states for metrology purposes has been demonstrated in [53, 54, 104, 106]. Rather than producing a squeezed state of a given frequency, a more realistic approach is to send a squeezed state containing a continuum of frequencies and post-process (take the Fourier-transform) the output signal of the measured time-domain momentum quadrature. Choosing a larger bandwidth of frequencies will result in a shorter experiment time but will decrease the energy of a given frequency. The frequency domain profile of the input state can be shifted so that it centres on a particular

frequency [29]. One is also able to tune the degree and direction of squeezing in the frequency domain [72].

Since we deal with a SISO system, the transfer function at frequency ω is a complex phase $\Xi_\theta(-i\omega) := e^{-i\lambda(\omega,\theta)}$. Taking into account the action of the two beamsplitters we find that the input-output map in the Schrödinger picture is (see for example [104])

$$|S_r^\phi \otimes \alpha\rangle \mapsto e^{-i\lambda(\omega,\theta)\left(\mathbf{b}_0^*\mathbf{b}_0 - \mathbf{c}_0^*\mathbf{c}_0\right)/2}|S_r^\phi \otimes \alpha\rangle =: |\psi_\theta\rangle \tag{7.4}$$

Now, using formula (4.5) we find that the QFI depends only on the difference $\psi - \phi$, so without loss of generality we may set $\phi = 0$; in this case, the QFI is maximized when $\psi = 0$ and is explicitly given by $F(\theta) = |\partial\lambda(\omega,\theta)/\partial\theta|^2 \left(\alpha^2 e^{2r} + \sinh^2 r\right)$ [104]. This situation corresponds to momentum-squeezing in one arm and position displacement in the other. We note that putting all of the energy into one of the two arms (i.e. either $\alpha = 0$ or $r = 0$) will result in $F(\theta) \propto E$, which is the standard precision scaling. The optimal QFI subject to the energy constraint $E = |\alpha|^2 + \sinh^2(r)$ is achieved when equal energy is put into both arms: $\alpha^2 = \sinh^2(r) = E/2$; then

$$F(\theta) = \left|\frac{\partial\lambda(\theta)}{\partial\theta}\right|^2 \left(\frac{E}{2} \cdot e^{2r} + \frac{E}{2}\right) \approx \left|\frac{\partial\lambda(\theta)}{\partial\theta}\right|^2 E^2. \tag{7.5}$$

Therefore, this strategy is (asymptotically) as good as the one using N00N states [104].

Finally we will see that this QFI scaling can be achieved experimentally by using a homodyne measurement. Since we are interested in the asymptotic regime of large energy, we assume that the parameter θ is known up to at least the standard uncertainty $E^{-1/2}$, so we can write $\theta = \theta_0 + h/\sqrt{E}$ where θ_0 is known and h is an unknown "local parameter". The reference parameter θ_0 could be obtained by using iterative adaptive procedures while using a small proportion of the input energy [107]. Using the knowledge of θ_0, we slightly modify the set-up by adding a second linear system in the other arm of the interferometer, denoted by θ_0 in Fig. 7.2. This can be a static phase rotation element with phase $e^{-i\lambda(\omega,\theta_0)}$, or another PQLS with matrices $(S, C, \Omega) = (S_{\theta_0}, C_{\theta_0}, \Omega_{\theta_0})$, and its purpose is to "balance" the action of the PQLS and simplify the structure of the final measurement as shown below. Later,

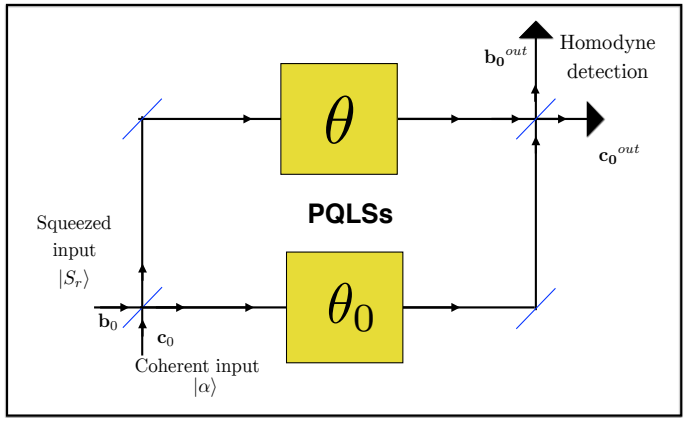

FIGURE 7.2: Figure showing the interferometric set-up for SISO PQLS with a squeezed state $|S_r\rangle$ incident upon one arm of the interferometer and a coherent state $|\alpha\rangle$ in the other. The set-up is the same as before except that a phase shifter or a second known PQLS has been placed in the other interferometric arm.

we see another instance of balancing the action of the QLS when we discuss *quantum absorbers* in Ch. 9. Now, the output operators of the interferometer are given by

$$\mathbf{b}_0^{out} = \tfrac{1}{2}\Big(\mathbf{b}_0(e^{-i\lambda(\omega,\theta)} + e^{-i\lambda(\omega,\theta_0)}) + \mathbf{c}_0(e^{-i\lambda(\omega,\theta)} - e^{-i\lambda(\omega,\theta_0)})\Big),$$
$$\mathbf{c}_0^{out} = \tfrac{1}{2}\Big(\mathbf{b}_0(e^{-i\lambda(\omega,\theta)} - e^{-i\lambda(\omega,\theta_0)}) + \mathbf{c}_0(e^{-i\lambda(\omega,\theta)} + e^{-i\lambda(\omega,\theta_0)})\Big).$$

By expanding $e^{-i\lambda(\omega,\theta)} = e^{-i\lambda(\omega,\theta_0)}(1 - ih\lambda'_\theta(\omega,\theta_0)/\sqrt{E}) + O(E^{-1})$ we find that in the optimal setting of equal energy in the input channels ($|\alpha|^2 = E/2$) the action of the output annihilator is

$$\mathbf{b}_0^{out}\,|S_r\rangle \otimes |\alpha\rangle \approx e^{-i\lambda(\omega,\theta_0)}\left(\mathbf{b}_0 - ih\lambda'_\theta(\omega,\theta_0)\frac{\alpha}{2\sqrt{E}}\mathbb{1}\right)|S_r\rangle \otimes |\alpha\rangle\,.$$

Hence when the energy is large we have $\mathbf{b}_0^{out} \approx e^{-i\lambda(\omega,\theta_0)}\left(\mathbf{b}_0 - i\frac{h\lambda'_\theta(\omega,\theta_0)\alpha}{2\sqrt{E}}\mathbf{1}\right)$ and the action of the Mach-Zehnder interferometer is to first displace the squeezed mode $\mathbf{b}_0$ along the momentum axis by $h\lambda'_\theta(\omega,\theta_0)\alpha/\sqrt{2E}$, followed by a $e^{-i\lambda(\omega,\theta_0)}$ phase rotation. Let X denote the outcome of measuring the following quadrature of the mode $\mathbf{b}_0$:

$$\mathbf{X}_{\pi/2+\lambda(\omega,\theta_0)} = -\sin(\lambda(\omega,\theta_0))\mathbf{Q} + \cos(\lambda(\omega,\theta_0))\mathbf{P}.$$

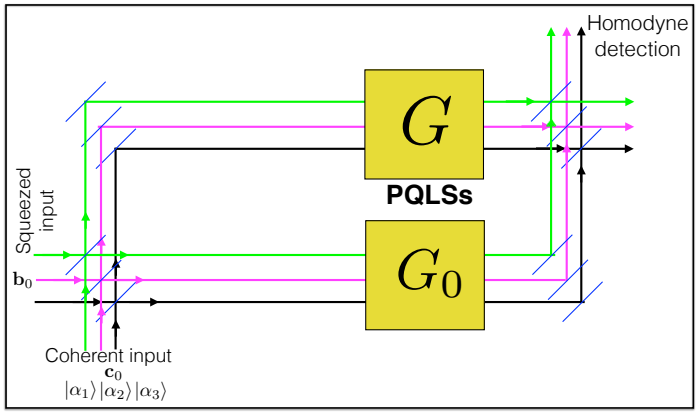

FIGURE 7.3: This figure shows the MIMO PQLS system identification setup. In this diagram the number of field modes, m, is equal to three.

As $\mathbb{E}_\theta[X] = -h\lambda'_\theta(\omega,\theta_0)/2$ we choose the (locally) unbiased estimator of θ given by

$$\hat{\theta} = \theta_0 - \frac{2}{\lambda'_\theta(\omega,\theta_0)\sqrt{E}}X$$

and obtain the mean square error

$$\mathbb{E}\left[(\hat{\theta}-\theta)^2\right] = \frac{4}{E\lambda'_\theta(\omega,\theta_0)^2}\mathrm{Var}(X) = \frac{2}{E\lambda'_\theta(\omega,\theta_0)^2 e^{2r}} \approx \frac{1}{\lambda'_\theta(\omega,\theta_0)^2 E^2}, \tag{7.6}$$

hence the Heisenberg-limited estimation is achieved.

The MIMO Case

In this section we extend the SISO case to MIMO PQLSs . The strategy that we use for MIMO is a direct extension of the SISO strategy and is illustrated in Fig. 7.3. The input channels $\mathbf{b} = [\mathbf{b}_1,\ldots,\mathbf{b}_m]^T$ are prepared in a monochromatic multi-mode squeezed state [68] of frequency ω; these channels are mixed by means of separate 50:50 beamsplitters with the corresponding ancilla channels $\mathbf{c} = [\mathbf{c}_1,\ldots,\mathbf{c}_m]^T$ prepared in coherent states of the same frequency. One of the outputs of each beam splitter is then passed through the PQLS and the other through a second known PQLS (to be specified shortly) before recombining at another 50:50 beam-splitter.

Just as in the SISO case, we assume that we already computed a rough estimate θ_0 with standard deviation of order $1/\sqrt{E}$, such that the parameter can be written as $\theta = \theta_0 + h/\sqrt{E}$ for some local parameter h. This could be achieved for instance by performing appropriate homodyne measurements on the output for a monochromatic input. Then the transfer function can be expanded as

$$\Xi_\theta(-i\omega) = \Xi_{\theta_0}(-i\omega)\left(\mathbb{1}_m - ihL(\omega,\theta_0)/\sqrt{E}\right) + \mathcal{O}\left(E^{-1}\right)$$

where $L(\omega,\theta_0)$ is a $m \times m$ Hermitian matrix. The second system to be placed in lower arm of the interferometer (see Fig. 7.3) is either the PQLS $(S_{\theta_0}, C_{\theta_0}, \Omega_{\theta_0})$ or a static configuration of beam splitters giving the phase element $\Xi_{\theta_0}(-i\omega)$. It follows that the $2m$ input channels transform according to

$$\begin{bmatrix} \mathbf{b}_0^{out} \\ \mathbf{c}_0^{out} \end{bmatrix} \approx \begin{bmatrix} \Xi_{\theta_0} & 0 \\ 0 & \Xi_{\theta_0} \end{bmatrix} \left\{ \mathbb{1}_{2m} - \frac{ih}{2\sqrt{E}} \begin{bmatrix} L(\omega,\theta_0) & L(\omega,\theta_0) \\ L(\omega,\theta_0) & L(\omega,\theta_0) \end{bmatrix} \right\} \begin{bmatrix} \mathbf{b}_0 \\ \mathbf{c}_0 \end{bmatrix}.$$

where $\mathbf{b}_0^{out} = \mathbf{b}^{out}(\omega)$ and $\mathbf{c}_0^{out} = \mathbf{c}^{out}(\omega)$ are the frequency modes we are interested in. As in the SISO case we prepare the probe mode $\mathbf{b}_0$ in a squeezed state and $\mathbf{c}_0$ in a coherent state with amplitude $\boldsymbol{\alpha} = [\alpha_1, \ldots, \alpha_m]^T$ such that $\alpha_i = \mathcal{O}(\sqrt{E/2m})$. Then

$$\mathbf{b}_0^{out} |S_r\rangle \otimes |\alpha\rangle \approx \Xi_{\theta_0} \left\{ \mathbf{b}_0 - \frac{ih}{2\sqrt{E}} L(\omega,\theta_0)\boldsymbol{\alpha}\mathbb{1} \right\} |S_r\rangle \otimes |\alpha\rangle . \tag{7.7}$$

which means that the local parameter h is imprinted into the output state via a displacement of the squeezed mode $\mathbf{b}_0$.

Now, let us find the optimal state of squeezed-coherent type. Since Ξ_{θ_0} is known, we will ignore its effect which can be undone by performing a phase transformation on the output modes. The output state is therefore a displaced squeezed state whose mean is given by

$$\langle \mathbf{Q} \rangle = \frac{h}{\sqrt{2E}} \mathrm{Im}\left[L(\omega,\theta_0)\boldsymbol{\alpha}\right] = \frac{h}{\sqrt{E}}\mu_q, \quad \langle \mathbf{P} \rangle = \frac{-h}{\sqrt{2E}} \mathrm{Re}\left[L(\omega,\theta_0)\boldsymbol{\alpha}\right] = \frac{h}{\sqrt{E}}\mu_p$$

where $\mathbf{Q}$ and $\mathbf{P}$ are the vectors of canonical coordinates of the m modes. We denote by V the covariance matrix

$$V := \mathrm{Re}\begin{pmatrix} \langle \mathbf{Q}\mathbf{Q}^T\rangle & \langle \mathbf{Q}\mathbf{P}^T\rangle \\ \langle \mathbf{P}\mathbf{Q}^T\rangle & \langle \mathbf{P}\mathbf{P}^T\rangle \end{pmatrix}$$

The QFI for the parameter $\theta = \theta_0 + h/\sqrt{E}$ is given by [108]

$$I(\theta_0) = \mu^T V^{-1}\mu, \qquad \mu := \begin{pmatrix} \mu_q \\ \mu_p \end{pmatrix} = \frac{1}{\sqrt{2}}\begin{pmatrix} \mathrm{Im}\,[L(\omega,\theta_0)\boldsymbol{\alpha}] \\ \mathrm{Re}\,[L(\omega,\theta_0)\boldsymbol{\alpha}] \end{pmatrix}$$

We will now argue that the best strategy is to squeeze in one mode (or quadrature) only. Since Fisher information is independent of the chosen basis in the space of modes, we will choose the latter to be the eigenbasis of the selfadjoint matrix $L(\omega,\theta_0)$ such that $(1,0,\ldots,0)$ is the eigenvector whose eigenvalue has the largest absolute value equal to $\|L(\omega,\theta_0)\|$. Then the following inequality holds

$$I(\theta_0) \leq \|V^{-1}\| \cdot \|\mu\|^2 \leq \|V^{-1}\| \cdot \|L(\omega,\theta_0)\|^2 \cdot \|\boldsymbol{\alpha}\|^2/2.$$

The second inequality becomes equality by setting $\boldsymbol{\alpha} = \sqrt{E_c}(1,0\ldots,0)$ where E_c is the energy of the coherent state. The first inequality is saturated by choosing V to be the covariance of a squeezed state in which the first mode is squeezed along the $\mathbf{Q}$ quadrature, while all other modes are in the vacuum. In the leading order in the energy of the squeezed state we have $\|V^{-1}\| = 8E_{sq}$, and by imposing the constraint $E_c + E_{sq} = E$ we find that the optimal energy distribution is $E_c = E_{sq} = E/2$. Therefore the maximum value of the QFI is

$$I(\theta_0) = E^2\|L(\omega,\theta_0)\|^2 \tag{7.8}$$

Finally, the left hand side can be further optimised over the frequency ω to obtain the highest QFI in this setting. As in the SISO case, the QFI can be achieved by measuring the displaced squeezed quadrature.

Remark 11. *The expression (7.8) is the QFI from the modes $\mathbf{b}_0^{out}$ only (rather than $\mathbf{b}_0^{out}$ and $\mathbf{c}_0^{out}$), however it is equal to (7.5), which is the QFI from both channels.*

Note also the consistency between the expressions (7.6) *and* (7.8)*, corresponding to the SISO and MIMO cases.*

7.1.3 Example: Two Atomic Ensembles

Consider the two coupled atomic ensembles setup from example 3. In particular, assume that we would like to investigate θ, which we assume to be small.

First, the transfer function matrix of this system, at $s = -i\omega$, is given by

$$\begin{aligned}\Xi(-i\omega) &= I - C(-i\omega I - A)^{-1}C^{\dagger} = I - \kappa\sqrt{Y}\Big(-i\omega I + \frac{\kappa}{2}Y\Big)^{-1}\sqrt{Y} \\ &= \frac{1}{\kappa^2/4 - i\omega\kappa\cosh(2\theta) - \omega^2}\begin{bmatrix} -\omega^2 - \kappa^2/4 & -i\omega\kappa\sinh(2\theta) \\ -i\omega\kappa\sinh(2\theta) & -\omega^2 - \kappa^2/4 \end{bmatrix}.\end{aligned}$$

If $\theta = 0$, we have

$$\Xi_0(-i\omega) = \frac{i\omega + \kappa/2}{i\omega - \kappa/2}\begin{bmatrix} 1 & 0 \\ 0 & 1 \end{bmatrix},$$

which can be represented as

$$\Xi_0(-i\omega) = e^{-iG_0(\omega)}, \quad G_0(\omega) = \begin{bmatrix} g_0(\omega) & 0 \\ 0 & g_0(\omega) \end{bmatrix},$$

with $g_0(\omega) = 2\arctan(-2\omega/\kappa) - \pi$. This corresponds to the transfer function matrix of two independent cavities coupled to probe fields with strength κ. Note that the small unknown parameter θ brings a small deviation from Ξ_0 and yields Ξ in the form

$$\Xi(-i\omega) = \Xi_0(-i\omega)\tilde{\Xi}(-i\omega).$$

By calculating $\Xi_0^{-1}\Xi$, we obtain $\tilde{\Xi}(-i\omega) = e^{-i\tilde{G}(\omega)} \approx I - i\tilde{G}(\omega)$ and find

$$\tilde{G} = -f(\omega)\theta\begin{bmatrix} 0 & 1 \\ 1 & 0 \end{bmatrix}, \quad f(\omega) = \frac{2\kappa\omega}{\omega^2 + \kappa^2/4}.$$

To identify θ we use the interferometric technique presented above, illustrated in Fig. 7.3. In our context the nominal system is given by the independent pair of

cavities with generator G_0. Now the input fields into the interferometer are given by $\mathbf{b} = [\mathbf{b}_1, \mathbf{b}_2]^T$ and $\mathbf{c} = [\mathbf{c}_1, \mathbf{c}_2]^T$; as described before, $\mathbf{b}_1$ ($\mathbf{b}_2$) and $\mathbf{c}_1$ ($\mathbf{c}_2$) are combined at the first beam splitter, hence they have the same frequencies. The output fields of the interferometer are related to $\mathbf{b}$ and $\mathbf{c}$ as

$$\begin{bmatrix} \mathbf{b}^{out} \\ \mathbf{c}^{out} \end{bmatrix} = e^{-iG_0}\left\{ I_2 - \frac{i}{2}\begin{bmatrix} \tilde{G} & \tilde{G} \\ \tilde{G} & \tilde{G} \end{bmatrix} \right\} \begin{bmatrix} \mathbf{b} \\ \mathbf{c} \end{bmatrix}.$$

Thus by setting the $\mathbf{c}$ modes to coherent fields with amplitudes $\boldsymbol{\alpha} = [\alpha_1, \alpha_2]^T$, in good approximation we have

$$\mathbf{b}^{out} = e^{-iG_0}\Big(\mathbf{b} - \frac{i}{2}\tilde{G}\boldsymbol{\alpha}\mathbb{1}\Big).$$

Now because $\tilde{G}$ has elements only in the off-diagonal terms, we should set:

- $\mathbf{b}_1$ to be a momentum-squeezed vacuum field with squeezing level r, while $\mathbf{b}_2$ to be a vacuum,
- $\mathbf{c}_2$ to be a coherent field with amplitude $\alpha_2 = \alpha$, while $\mathbf{c}_1$ to be a vacuum,
- and measure $\mathbf{b}_1^{out}$.

Interestingly, in this example the best input is one where energy is inputted into only one arm of each of the two interferometers. Actually we then have

$$\mathbf{b}_1^{out} = e^{-ig_0(\omega)}\Big(\mathbf{b}_1 + \frac{i}{2}f(\omega)\alpha\theta\mathbb{1}\Big),$$

implying that we can estimate θ by measuring the phase-shifted $\mathbf{P}$-component of $\mathbf{b}_1^{out}$. But before writing the output signal equation for identification we should note that $f(\omega)^2$ takes the maximum value $f(\omega^{\text{opt}})^2 = 4$ at $\omega^{\text{opt}} = \pm\kappa/2$; this is the optimal measurement frequency we should take. Thus the optimal homodyne measurement is given by setting the phase of the local oscillator to $g_0(\omega^{\text{opt}})$, and it generates the following signal for estimating θ:

$$y = \frac{\sqrt{2}}{f(\omega^{\text{opt}})\alpha}\mathbf{P}_1^{(g_0)} = \frac{\sqrt{2}}{f(\omega^{\text{opt}})\alpha} \cdot \frac{e^{ig_0(\omega^{\text{opt}})}\mathbf{b}_1^{out} - e^{-ig_0(\omega^{\text{opt}})}(\mathbf{b}_1^{out})^*}{\sqrt{2}i} = \frac{\sqrt{2}}{f(\omega^{\text{opt}})\alpha}\mathbf{P}_1 + \theta,$$

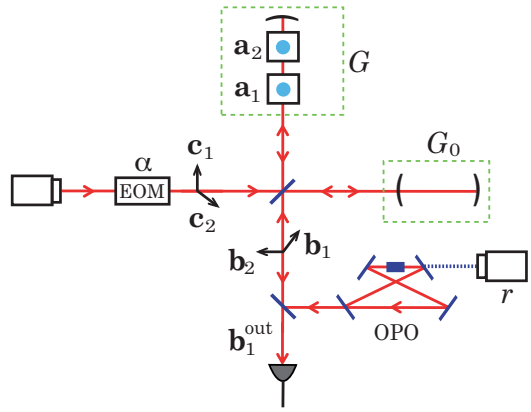

FIGURE 7.4: Configuration of the one-parameter system identification method for a MIMO system composed of atomic ensembles denoted by G. G_0 is a Fabri-Perot cavity having the same decay rate as that of G.

where $\mathbf{P}_1 = (\mathbf{b}_1 - \mathbf{b}_1^*)/\sqrt{2}i$. [1] Clearly the expectation of y yields θ with variance

$$\mathrm{Var}(y) = \frac{2}{f(\omega^{\mathrm{opt}})^2} \cdot \frac{1}{2\alpha^2 e^{2r}} \approx \frac{1}{f(\omega^{\mathrm{opt}})^2 E^2},$$

which is the Heisenberg scaling.

A possible experimental setup is depicted in Fig. 7.4. We here consider a Michelson-type interferometer composed of two optical paths. The input field $\mathbf{b}$ is injected from the bottom arm, while $\mathbf{c}$ comes from the left arm. Although in [76] $\mathbf{b}_1$ and $\mathbf{b}_2$ are taken as two bosonic modes with different frequencies, here they are represented as those with different polarizations (same as for $\mathbf{c}$). The system G is placed in the upper part of the interferometer; as seen in [76] this system is composed of the cascade of two chambers containing atomic ensembles. The nominal system G_0, on the other hand, is now given by an optical cavity having the same coupling strength κ, and it is now placed in the right end of the interferometer. As described above, our identification strategy is that we create a squeezed state in the mode $\mathbf{b}_1$ and a

[1] Note that this is not a frequency-dependent homodyne measurement, i.e. the so-called variational measurement found in the proposal for gravitational wave detection, which requires implementing additional filter cavities. Also note that $f(\omega)$ takes zero at $\omega = 0$, i.e. the center frequency, in which case clearly we cannot obtain any information about θ. Optimization of ω is essential in these sense.

coherent state in the mode $\mathbf{c}_2$; the former can be realized by constructing an optical parametric oscillator (OPO) and the latter can be realized by placing an electric optical modulator (EOM) along the input path of $\mathbf{c}_2$.

7.2 Estimation of Multi-Dimensional Parameters in a PQLS

In this section we discuss how to extend the interferometric approach using squeezed-coherent states to the case of multiple parameters.

7.2.1 General Multiple Parameter Setup

Suppose that we have a PQLS with m input channels and that we would like to estimate multiple parameters $\theta_1, \ldots, \theta_d$. Consider the metrology setup with inputs supported on $d/m \in \mathbb{Z}$ frequencies and a MIMO PQLS with m channels. By thinking of the different frequencies as parallel channels, we have d input channels on which to support our input state. Based on the successes of the interferometric setup using squeezed-coherent state in the single parameter case we consider a generalisation of this here. That is, the input channels $\mathbf{b} = [\mathbf{b}_1, \ldots, \mathbf{b}_d]^T$ are prepared in a multi-mode squeezed state [68]; these channels are mixed by means of separate 50:50 beamsplitters with the corresponding ancilla channels $\mathbf{c} = [\mathbf{c}_1, \ldots, \mathbf{c}_d]^T$ prepared in coherent states. One of the outputs of each beam splitter is then passed through the PQLS and the other through a second known PQLS (to be specified shortly) before recombining at another 50:50 beam-splitter. We assume that the frequencies $\omega_1, ...\omega_{d/m}$ have been chosen beforehand and we drop the reference to frequency in the following (we will consider the problem of varying these in Sec. 7.4).

As in the single parameter case, we assume that we already computed a rough estimate of the parameters each with standard deviation of the order $1/\sqrt{E}$, such that the parameters can be written as $\theta_i = \theta_{0i} + h_i/\sqrt{E}$ for some local parameter h_i. Then the transfer function (of the frequency concatenated system) may be expanded

as

$$\Xi_\theta = \Xi_{\theta_0}\left(\mathbb{1}_m - i\sum_i \frac{h_i L^{(i)}(\theta_0)}{\sqrt{E}}\right) + \mathcal{O}\left(E^{-1}\right)$$

where $L^{(i)}(\omega, \theta_0)$ are $d \times d$ Hermitian matrices and $\theta_0 = (\theta_{01}, \ldots, \theta_{0d})$. Now, place the PQLS $(S_{\theta_0}, C_{\theta_0}, \Omega_{\theta_0})$ in the lower interferometer arms. Also, prepare the probe mode $\mathbf{b}_0$ in a squeezed state and $\mathbf{c}_0$ in a coherent state with amplitude $\boldsymbol{\alpha} = [\alpha_1, \ldots, \alpha_d]^T$ such that $\alpha_i = \mathcal{O}(\sqrt{E/2m})$. We will assume that $\alpha_i \in \mathbb{R}$ for all i. It follows that

$$\mathbf{b}_0^{out}\left|S_r\right\rangle \otimes \left|\alpha\right\rangle \approx \Xi_{\theta_0}\left\{\mathbf{b}_0 - i\frac{\sum_i h_i L^{(i)}(\omega, \theta_0)}{2\sqrt{E}}\boldsymbol{\alpha}\mathbb{1}\right\}\left|S_r\right\rangle \otimes \left|\alpha\right\rangle. \tag{7.9}$$

Since Ξ_{θ_0} is known we will ignore its effect like in the single parameter case. Therefore the local parameter h_i is imprinted on the output via a displacement of the squeezed mode; on mode $\mathbf{b}_j$ the displacement is along the (unnormalized) quadrature

$$\mathbf{X}^{(i)} := \mathbf{b}_j \sum_k \left(iL_{jk}^{(i)}\alpha_k\right) - \mathbf{b}_j^\dagger \sum_k \left(i\overline{L_{jk}^{(i)}}\alpha_k\right).$$

Therefore the generator belonging to θ_i is thus $\mathbf{G}^{(i)} := \sum_{jk}\left(\mathbf{b}_j L_{jk}^{(i)} + \mathbf{b}_j^* \overline{L_{jk}^{(i)}}\right)\alpha_k$. The difference with the single parameter case is that here there are d parameters each displacing the input additively in **different** directions. Further, notice that the generators of the displacement for each parameter, $\mathbf{G}^{(i)}$, depend on the coherent input, and change according to variations in this input. Finding the optimal scaling or even whether Heisenberg scaling is possible in the multi-parameter case is more involved.

In order to infer the d parameters with high accuracy from measuring quadratures, it is clear that we must measure at least d quadratures. Moreover these quadratures $\mathbf{Y}_1, ...\mathbf{Y}_d$ must satisfy the following properties:

(1) They must contain sufficient information about all parameters. This can only happen if at least one of them does not commute with each displacement generator. That is, for each parameter θ_k, there exists an i such that $[\mathbf{G}^{(k)}, \mathbf{Y}_i] \neq 0$. This condition is necessary because if it didn't hold then measurements of the output will not contain any information about θ_k on average because in the

Heisenberg picture $\langle \mathbf{Y}_i \rangle = \left\langle e^{i\theta_k \mathbf{G}^{(k)}} \mathbf{Y}_i e^{i\theta_k \mathbf{G}^{(k)}} \right\rangle$ for all i.

(2) To get Heisenberg scaling we must be able to measure at least d quadratures with small variance. If these quadratures are to be measured then they must all commute, that is, $[\mathbf{Y}_i, \mathbf{Y}_j] = 0$ for all i and j.

If the system is identifiable (see Def. 8), we see that there always exists a coherent input such that conditions (1) and (2) hold. We then show how to achieve the Heisenberg scaling in this case.

7.2.2 SISO PQLS

Consider a SISO system with inputs supported on d frequencies (i.e $m = 1$). There is a simplification in this case because the generators for parameters θ_k are given by $\mathbf{G}^{(k)} = \mathbf{Q}_1 L_{11}^{(k)} \alpha_1 + \ldots + \mathbf{Q}_d L_{dd}^{(k)} \alpha_d$. Therefore, as the $\alpha_i \in \mathbb{R}$ and $L^{(k)}$ are Hermitian and diagonal, the action of all generators is a displacement in the same direction, i.e each mode $\mathbf{b}_i$, is translated along the momentum axis.

Consider a squeezed input consisting of a product of d momentum-squeezed one mode states over the modes $\mathbf{b}_0$ each with energy $E_i = \mathcal{O}(E/2d)$ and the coherent state as above. Since the action of the system is a displacement along the momentum axis (as this direction is canonically conjugate to the generator), we will measure the momentum quadrature of each mode. Clearly conditions (1) and (2) hold under identifiability. We will now show that Heisenberg scaling is achievable under the assumption that the parameters are identifiable. The (classical) Fisher information in this case is given by [108]

$$F_{mn}(\theta_0) = 8\mu_m^T \mathrm{Diag}(E_1, ...E_m)\mu_n, \quad \mu_m = \frac{1}{\sqrt{2}} \sum_i L_{ii}^{(m)} \alpha_i.$$

Hence

$$F(\theta_0) = 4 \sum_i E_i \alpha_i^2 \begin{pmatrix} L_{ii}^{(1)} \\ \vdots \\ L_{ii}^{(d)} \end{pmatrix} \begin{pmatrix} L_{ii}^{(1)} & \ldots & L_{ii}^{(d)} \end{pmatrix}. \tag{7.10}$$

Therefore the MSE, which is equal to $\mathrm{Tr}\,(F(\theta_0)^{-1})$ (see Eq. (4.6)), will scale quadratically with E iff the vectors $v_i := \begin{pmatrix} L_{ii}^{(1)} & \ldots & L_{ii}^{(d)} \end{pmatrix}^T$ form a basis. Writing the transfer

function as a phase $\Xi_\theta(-i\omega_i) = e^{-i\lambda_i}$, then this condition is equivalent to the invertibility of the Jacobean of the map $f : \mathbb{R}^d \mapsto \mathbb{R}^d$

$$f : (\theta_1, \ldots, \theta_d) \mapsto (\lambda_1, \lambda_2, \ldots, \lambda_d).$$

Assuming that the parameters θ are identifiable as in Def 8, then the Jacobian must be invertible and we have Heisenberg scaling.

7.2.3 MIMO PQLS

Proving that Heisenberg scaling is possible for a MIMO PQLS is not as straightforward because the the (displacement) generators of each parameter could potentially be along different directions, rather than all in the same direction. Nevertheless it is possible, as we see now.

Consider a squeezed input consisting of a product of d mode states each with energy $E_i = \mathcal{O}(E/2d)$, squeezed in the quadratures

$$\mathbf{Y}_i = e^{i\phi_i}\mathbf{b}_i + e^{-i\phi_i}\mathbf{b}_i^\dagger,$$

where ϕ_i will be chosen later, and the coherent state as above. Our measurement will be the quadratures $\mathbf{Y}_i$. Clearly condition (2) is satisfied here. Let us see that there exist a choice of α such that condition (1) is also. We have

$$\begin{aligned}[\mathbf{G}^{(k)}, \mathbf{Y}_i] &= \sum_j \left(e^{-i\phi_i}\overline{L_{ij}^{(k)}} - e^{i\phi_i}L_{ij}^{(k)}\right)\alpha_j \\ &:= \sum_j \beta_{ij}^{(k)}\alpha_j. \end{aligned} \tag{7.11}$$

For a given k we require that there exists at least one $\mathbf{Y}_i$ such that (7.11) is non-zero. Since we have freedom over the choice of α_is then it is clear that (7.11) can be made to be non-zero if at least one of the terms $\beta_{ij}^{(k)}$ is non-zero, which, given that we have choice over ϕ_i, is always possible if one of the $L_{ij}^{(k)}$ is non-zero for a given j. Therefore the only way that we will not be able to to choose a measurement and

input, α, such that condition (1) is satisfied would be if for a given k, $L_{ij}^{(k)} = 0$ for all i and j, which is a contradiction to the fact that θ_i is identifiable.

Now let us show that Heisenberg scaling is possible here and show how to achieve it. The Fisher information of this measurement is thus [108]

$$F_{mn}(\theta_0) = 8\mu_m^T \mathrm{Diag}(E_1, ...E_m)\mu_n, \quad \mu_m = \frac{1}{\sqrt{2}}\mathrm{Re}(ie^{i\phi}L^{(m)}\alpha).$$

Hence

$$F(\theta_0) = 4\sum_i E_i \begin{pmatrix} K_i^{(1)} \\ \vdots \\ K_i^{(d)} \end{pmatrix} \begin{pmatrix} K_i^{(1)} & ... & K_i^{(d)} \end{pmatrix}, \tag{7.12}$$

where $K_j^{(i)} = \mathrm{Re}\left(e^{i\phi_j}\sum_l L_{jl}^{(i)}\alpha_l\right)$. Because α_i^2 are of order E, then clearly if $F(\theta_0)$ is invertible then the MSE, which is equal to $\mathrm{Tr}\left(F(\theta_0)^{-1}\right)$ (see Eq. (4.6)), will scale quadratically with E. It therefore remains to show that there exists a choice of α such that this matrix is invertible. Suppose that $m = d$ for simplicity. The Fisher information matrix is invertible iff the vectors in Eq. (7.12) are linearly independent. Suppose that for a particular choice of α and ϕ_i they are not linearly independent. That is,

$$\begin{pmatrix} \mathrm{Re}\left(e^{i\phi_j}\sum_l L_{il}^{(1)}\alpha_l\right) \\ \vdots \\ \mathrm{Re}\left(e^{i\phi_j}\sum_l L_{il}^{(d)}\alpha_l\right) \end{pmatrix} = \gamma \begin{pmatrix} \mathrm{Re}\left(e^{i\phi_j}\sum_l L_{jl}^{(1)}\alpha_l\right) \\ \vdots \\ \mathrm{Re}\left(e^{i\phi_j}\sum_l L_{jl}^{(d)}\alpha_l\right) \end{pmatrix} \tag{7.13}$$

for some i and j and constant γ. Since we have freedom over the choice of α and ϕ_is, then it is always possible to vary these so that the two vectors in Eq. (7.13) are not multiples of one another if and only if $L^{(i)} \neq aL^{(j)}$ for some constant a, which is true under identifiability.

Therefore in conclusion we can always identify $d \leq m$ parameters of a PQLS at Heisenberg level using this method iff the parameters are identifiable. The trick is in choosing the α and ϕ_i such that we have at least d linearly independent vectors $\left(K_i^{(1)}, ..., K_i^{(d)}\right)^T$.

7.2.4 Optimisation Problem

Still unanswered is what is the optimal squeezed-coherent state (and measurement) giving the smallest MSE? That is, we would like to minimise the quantity $\mathrm{Tr}(F^{-1})$, where $F(\theta_0)$ is the (classical) Fisher information given by,

$$F_{ij}(\theta) = 8\mu_i^T \mathrm{Diag}(E_1, \ldots, E_m)\mu_j, \quad \mu_m = \frac{1}{\sqrt{2}}\mathrm{Re}\left(UL^m\alpha\right).$$

Here U is a $m \times m$ unitary matrix characterising the direction of squeezing for our squeezed input state and as a result we are measuring the quadratures $U\mathbf{b} + \overline{U}\mathbf{b}^\dagger$ here. Thus the problem is a minimisation over all choices of $U, E_1, ...E_m$ and $\alpha_1, ...\alpha_m$ subject to total energy constraint $E \approx E_1 + ... + E_m + |\alpha_1|^2 + ... + |\alpha_m|^2$. This minimisation proves to be very difficult, even in the SISO case. Moreover, it is not even even clear how many channels should be used; recall we saw in the one parameter case that the optimal number is one, so perhaps here it is d? In the one extreme consider a "broadband squeezing" in the frequency domain, which would make sense practically and metrologically. Some simple calculations seem to indicate that squeezing lots of frequency modes independently decreases the accuracy since you need to spread energy over all of them. This would be an interesting question for future work; perhaps it may be that it's optimal to squeeze only a number of modes of the order of the number of parameters. Furthermore, is there any advantage in considering entanglement between the squeezed modes? We consider a particular instance of this problem in Sec. 7.3. Creating frequency entangled squeezed states can be achieved using a *synchronously pumped optical parametric oscillator* (SPOPO) [109, 110].

7.3 Using Entanglement Between Frequencies

In this section we extend the work of [99], which deals with the problem of estimating d-dimensional parameters. For a SISO PQLS we show there is an $\mathcal{O}(d)$ advantage to be had by using probe states with entanglement between frequencies, over d repetitions of optimal single parameter identification experiments.

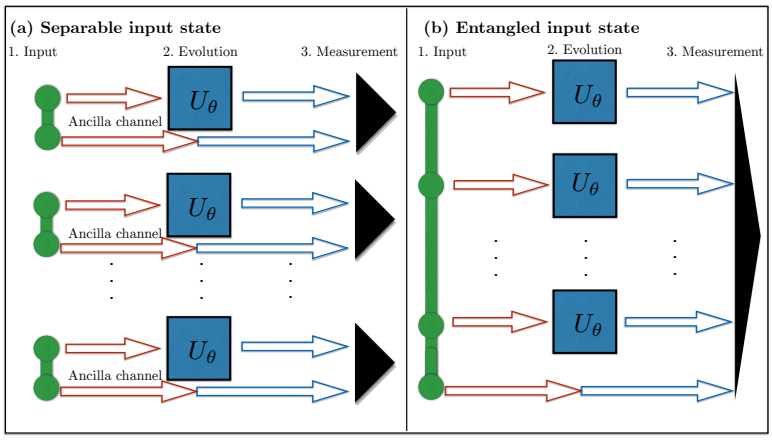

FIGURE 7.5: A multi-parameter model with a local Hamiltonian structure and d independent phases to estimate. Strategy (i): estimate the phases separately. Strategy (ii): estimate the phases using entangled states between the phase channels and a non-local measurement. Note that the setup is different from that of Fig. 4.1, as there each channel evolves with the same unitary.

7.3.1 The Analogous Quantum Metrology Result

We begin by reviewing the result [99]. Consider the quantum metrology set-up in Fig. 7.5, which consists of a $(d+1)$-mode interferometer with d independent phases $\theta_1, \theta_2, \ldots, \theta_d$ and an ancilla channel. The total unitary operator is given by $\mathbf{U} := \mathbb{1} \otimes \exp\left(\sum_{i=1}^{d} i\mathbf{N}_m\theta_m\right)$, where $\mathbf{N}_m$ is the number operator of the mth mode.

The following strategies using states with the same fixed photon number (hence energy) were compared in [99]:

(1) Estimating the d phases using d separate interferometers, each with a N/d-photon N00N state, or equivalently using a single product of N00N states for each mode.

(2) Estimating d phases using an N-photon $(d+1)$-mode entangled state.

We know that the best N-photon probe state for estimating a single phase is the N00N state. In light of this we consider using d repetitions of these states to estimate the parameters, which turns out to be the optimal fixed photon number state of type (1) [111]. Moreover, using the results from the previous subsection the

QFI scales as N^2/d^2 for each phase. Combining these, the total mean square error is d^3/N^2.

On the other hand, based on the intuition that N00N states are the best for single phases, the authors considered the following $(d+1)$-mode generalization

$$|\psi\rangle = \alpha\,|0\rangle \otimes \Big(|N,0,\ldots\rangle + |0,N,0,\ldots,0\rangle + \cdots + |0,\ldots,0,N\rangle \Big) + \beta\,|N,0,\ldots,0\rangle\,.$$

It was found that the optimal Cramer-Rao bound for the mean square error over these states is $\frac{(1+\sqrt{d})^2 d}{4N^2}$ corresponding to $\alpha = 1/\sqrt{d+\sqrt{d}}$. This shows a possible $\mathcal{O}(d)$ improvement by using entangled states. A similar result was found in [112] by using entangled coherent states (ECSs). The caveat here is that it is not clear whether the Cramer-Rao bound in strategy (ii) is achievable [111]. While it is true that a certain "commutativity of the SLDs in expectation" condition holds, this only guarantees the achievability of the CRB in the asymptotic sense where a large number of identically prepared copies of the state are available. However, by using independent probes, the Heisenberg scaling in energy is lost. Therefore, a more careful analysis of the scaling is necessary, but is beyond the scope of this thesis. We will restrict ourselves to the optimisation of the QCRB here.

We will now see that this sort of simultaneous estimation strategy is well-suited to to estimating multiple parameters simultaneously in PQLSs.

7.3.2 $\mathcal{O}(d)$ Enhancement Using Frequency-Entangled States

Suppose that we have a SISO PQLS whose transfer function $\Xi_\theta(s)$ depends on unknown parameters $\theta = (\theta_1, \theta_2, ..., \theta_d)$. In particular, for a fixed frequency $s = -i\omega$ it can be represented as $\Xi_\theta(-i\omega) = e^{-i\lambda(\theta)}$. Firstly, a fairly trivial but nonetheless important fact is that, for a SISO PQLS, it is impossible to identify more than one parameter using only a monochromatic frequency input. That is, the inverse problem is under-constrained. We now give an example of this fact for the case of two unknown parameters.

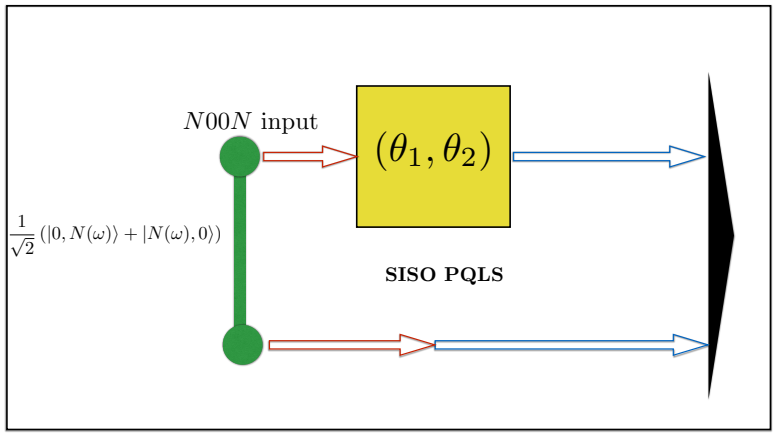

FIGURE 7.6: This figure shows the set-up in Example 18, where a N00N state is passed through a two parameter SISO PQLS. We consider an interferometric set up, where the two parallel channels meet at a beam-splitter.

Example 18. *Consider the set-up in Fig. 7.6, where a N00N state of fixed frequency ω is used as a probe for our two-parameter SISO PQLS. The state acts on two channels: one with the system and another ancilla channel. Denote the two unknown parameters by θ_1 and θ_2. The action of the PQLS on the input is thus*

$$\frac{1}{\sqrt{2}}\left(|0, N\rangle + |N, 0\rangle\right) \mapsto \frac{1}{\sqrt{2}}\left(|0, N\rangle + e^{-i\lambda(\theta_1,\theta_2)}\,|N, 0\rangle\right).$$

Using Eq. (4.4), given earlier for pure unitary families, the QFI is given by

$$F\left(\theta_1, \theta_2\right)_{l,m} = N^2 \frac{d\lambda}{d\theta_l}\frac{d\lambda}{d\theta_m}.$$

Recall that the MSE is bounded below by the trace of the inverse of the QFI matrix. However, here the QFI is singular. Therefore we are unable to identify both parameters. From this example it follows that we must allow for inputs supported over more frequencies if we are to identify parameters in a multi-parametric model.

Consider the set-up in Fig. 7.7 where an input state, supported over (fixed) frequencies $\omega_1, \omega_2, \ldots, \omega_d$, is passed through a SISO PQLS. Note that, due to the linear nature of PQLSs, each input with frequency ω_i acts independently and so can

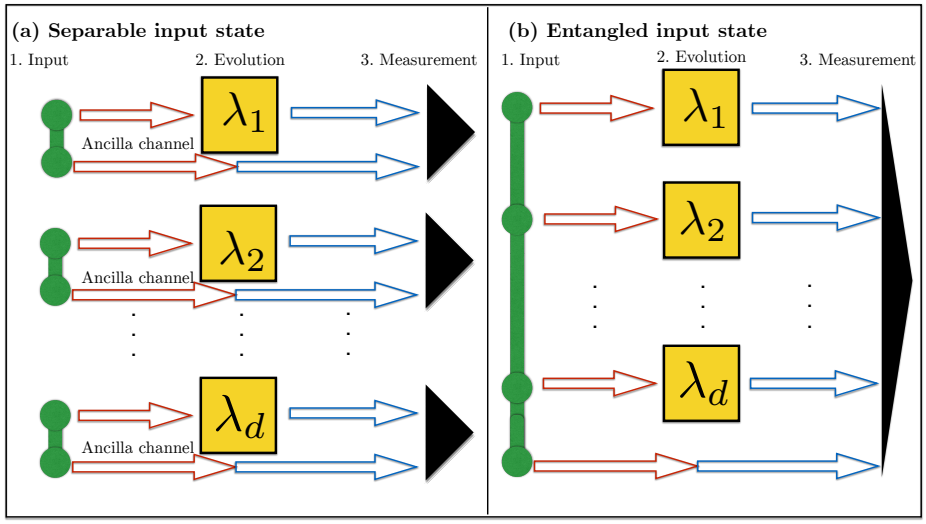

FIGURE 7.7: We consider a d-parameter model and pass an input state supported over d frequencies through our PQLS. We compare here two strategies: Strategy (i) corresponds to performing d separate single frequency experiments and Strategy (ii) is a simultaneous estimation scheme using inputs entangled over the frequencies.

be thought of as separate phase rotation channels with phase $\Xi_\theta(-i\omega_i) := e^{-i\lambda_i(\theta)}$. Therefore, the relevant total unitary operator is given by

$$\mathbf{U} := \mathbb{1} \otimes \bigotimes_{i=1}^{d} \exp\left(-i\lambda(\omega_i, \theta)\mathbf{b}^*(\omega_1)\mathbf{b}(\omega_1)\right)$$

where $\mathbb{1}$ is the identity on the ancillary system. As in the Sec. 7.3 we compare the following two strategies which uses the same energy resources:

(1) Estimating the d parameters using d separate interferometers, each with N/d-photon N00N state.

(2) Estimating the d unknown parameters using an N-photon $(d+1)$-mode frequency-entangled state.

In both strategies we assume for simplicity that the input frequencies, $\omega_1, \ldots, \omega_d$, have been chosen beforehand and the same resources have been given to each channel (system) channel.

This problem is similar to the metrology one from Sec. 7.3 with the difference that the phase of each interferometer arm depends on *all* of the unknown parameters, rather than a single one. Note that we could choose to estimate the θ's by first estimating the λ's and then calculating $\theta = f(\lambda)$ for some continuously differentiable function f. However, this method will not generally provide an optimal estimate for θ. Nevertheless it can be verified that the "commutativity in expectation" condition for the SLDs holds and the QCRB is achievable in the asymptotic sense discussed in Sec. 7.3. Our task will be to analyse the upper bound to the MSE given by $\mathrm{Tr}\,(F(\theta)^{-1})$, where $F(\theta)$ is the QFI for a specific input state.

Performance of Strategy 1

Recall from Sec. 7.1.1 that the optimal state for estimating a single parameter was a single frequency N00N state. For the multiple parameter case it is therefore natural to consider the input state:

$$|\psi\rangle = \frac{1}{\sqrt{2}}\left(\left|0, \frac{N(\omega_1)}{d}\right\rangle + \left|\frac{N(\omega_1)}{d}, 0\right\rangle\right) \otimes \ldots \otimes \frac{1}{\sqrt{2}}\left(\left|0, \frac{N(\omega_d)}{d}\right\rangle + \left|\frac{N(\omega_d)}{d}, 0\right\rangle\right),$$

which corresponds to d separate "frequency channels" with N/d particle N00N states as inputs for each of the d channels. Let us now, understand how accurate this strategy is by calculating $\mathrm{Tr}\,(I(\theta)^{-1})$. Defining $\frac{\partial|\psi_\theta\rangle}{\partial\theta_l} := |\partial_l\psi_\theta\rangle$, as in Sec. 4, we may firstly obtain

$$\langle\psi_\theta\,|\,\partial_l\psi_\theta\rangle = \frac{iN}{2d}\left(\frac{\partial\lambda_1}{\partial\theta_l} + \frac{\partial\lambda_2}{\partial\theta_l} + \ldots + \frac{\partial\lambda_d}{\partial\theta_l}\right),$$

$$\langle\partial_l\psi_\theta\,|\,\partial_m\psi_\theta\rangle = \frac{N^2}{d^2}\left(\frac{1}{2}\sum_{i=1}^{d}\frac{\partial\lambda_i}{\partial\theta_l}\frac{\partial\lambda_i}{\partial\theta_l} + \frac{1}{4}\sum_{\substack{i,j=1\\ i\neq j}}^{d}\frac{\partial\lambda_i}{\partial\theta_l}\frac{\partial\lambda_j}{\partial\theta_l}\right).$$

Then using 4.4, it follows that the QFI is given by

$$F(\theta)_{l,m} = \frac{N^2}{d^2}\sum_{i=1}^{d}\frac{\partial\lambda_i}{\partial\theta_l}\frac{\partial\lambda_i}{\partial\theta_m}\frac{N^2}{d^2}(J(\theta)^T J(\theta))_{l,m} \tag{7.14}$$

where $J(\theta)$ is the Jacobian of the map $f : \mathbb{R}^d \mapsto \mathbb{R}^d$

$$f : (\theta_1, \ldots, \theta_d) \mapsto (\lambda_1, \lambda_2, \ldots, \lambda_d),$$

Assuming the the parameter θ are identifiable, the Jacobian must be invertible and therefore

$$\mathrm{Tr}(F(\theta)^{-1}) = \frac{d^2}{N^2}\mathrm{Tr}(J(\theta)^{-1}(J(\theta)^T)^{-1}) = \frac{d^2 H(\theta)}{N^2|J(\theta)|^2} \tag{7.15}$$

where $|J(\theta)|$ is the determinant of $J(\theta)$, and $H(\theta) := \|P(\theta)\|_2^2$ with $P(\theta)$ the cofactor matrix of the Jacobian $J(\theta)$. Equation (7.15) provides the lower bound to the MSE for strategy 1 which features the Heisenberg scaling with respect to N.

Performance of Strategy 2

Since N00N states are optimal for single phases, we consider the following generalisation:

$$\begin{aligned} |\psi\rangle &= |0\rangle \otimes \Big(\alpha\,|N(\omega_1), 0, \ldots, 0\rangle + \cdots + \alpha\,|0, \ldots, 0, N(\omega_d)\rangle\Big) \\ &\quad +\beta\,|N(\omega_A)\rangle \otimes |0, \ldots, 0\rangle\,. \end{aligned} \tag{7.16}$$

where α, β are real and $d\alpha^2 + \beta^2 = 1$. The QFI matrix is given by

$$\begin{aligned} F(\theta)_{l,m} &= 4N^2\left[\alpha^2 \sum_{i=1}^{d} \frac{\mathrm{d}\lambda_i}{\mathrm{d}\theta_l}\frac{\mathrm{d}\lambda_i}{\mathrm{d}\theta_m} - \alpha^4 \left(\sum_{i=1}^{d} \frac{\mathrm{d}\lambda_i}{\mathrm{d}\theta_l}\right)\left(\sum_{i=1}^{d} \frac{\mathrm{d}\lambda_i}{\mathrm{d}\theta_m}\right)\right], \\ &= 4N^2\alpha^2 J(\theta)^T \left\{1 - d\alpha^2 Q\right\} J(\theta) \end{aligned} \tag{7.17}$$

where Q is the orthogonal projection onto the vector $\mathbf{1}/\sqrt{d} = (1,\ldots,1)/^T\sqrt{d}$. As in the case of strategy 1 we can compute the Cramé-Rao bound as

$$\begin{aligned}
\mathrm{Tr}(F(\theta)^{-1}) &= \frac{1}{4N^2\alpha^2}\mathrm{Tr}\left(J(\theta)^{-1}\left(1+\frac{d\alpha^2}{1-d\alpha^2}Q\right)(J(\theta)^T)^{-1}\right) \\
&= \frac{1}{4N^2\alpha^2}\mathrm{Tr}\left(J(\theta)^{-1}(J(\theta)^T)^{-1}\right) + \frac{d}{4N^2(1-d\alpha^2)}\mathrm{Tr}\left(J(\theta)^{-1}Q(J(\theta)^T)^{-1}\right) \\
&= \frac{1}{4N^2\alpha^2}\frac{H(\theta)}{|J(\theta)|} + \frac{d}{4N^2(1-d\alpha^2)}\mathrm{Tr}\left(J(\theta)^{-1}Q(J(\theta)^T)^{-1}\right) \\
&= \frac{H(\theta)-\alpha^2K(\theta)}{4N^2|J(\theta)|^2(1-d\alpha^2)\alpha^2}, \qquad (7.18)
\end{aligned}$$

where

$$H(\theta) := \|P(\theta)\|_2^2, \quad K(\theta) = \frac{1}{2}\sum_{j=1}^{d}\sum_{l,m=1}^{d}(P(\theta)_{j,l}-P(\theta)_{j,m})^2$$

with $P(\theta)$ the cofactor matrix of the Jacobian of $f(\theta)$. The minimum over α of the lower bound in Eq. (7.18) can be evaluated as

$$\min_\alpha \mathrm{Tr}(F(\theta)^{-1}) = \frac{(2dH(\theta)-K(\theta)) + \sqrt{4dH(\theta)\,(dH(\theta)-K(\theta))}}{4N^2|J(\theta)|^2},$$

and is attained at

$$\alpha_{opt}^2 = \frac{2dH(\theta)+\sqrt{4dH(\theta)\,(dH(\theta)-K(\theta))}}{2dK(\theta)}. \qquad (7.19)$$

By using the definitions of $H(\theta)$ and $K(\theta)$ one can check that $dH(\theta)-K(\theta) = \sum_{j=1}^{d}(\sum_{i=1}^{d}P_{ji})^2 \geq 0$, and further that $2dH(\theta)+K(\theta) \geq \sqrt{4dH(\theta)(dH(\theta)-K(\theta))}$. This implies

$$\min_\alpha \mathrm{Tr}(F(\theta)^{-1}) \leq \frac{dH(\theta)}{N^2|J(\theta)|^2}.$$

Comparison of Strategies 1 and 2

We summarise the two results on the quantum Cramer-Rao lower bounds obtained with the two strategies

- with strategy 1: $\mathrm{Tr}(F(\theta)^{-1}) = \frac{d^2H(\theta)}{N^2|J(\theta)|^2}$

- with strategy 2: $\mathrm{Tr}(F(\theta)^{-1}) \leq \frac{dH(\theta)}{N^2|J(\theta)|^2}$.

This indicates that by using entangled probe states one may be able to reduce the MSE by a factor d compared with product states. This result extends that of [99] (see Sec. 4.2). which can be regarded as a special case when $H(\theta) = d$, $K(\theta) = d^2 - d$ and $|J(\theta)| = 1$.

Generalising the above results to MIMO systems is more involved. Entangling between modes is more difficult to analyse because these channels are not independent. Alternatively, using only one of these channels for each frequency causes problems as the setup behaves like the noisy setup as information is lost in the remaining channels. The most interesting question here is whether it is possible to use entanglement between the channels to gain an estimation improvement.

7.3.3 Squeezing-Based Realization

Because the N00N states that we have used here aren't very practical (for the reasons discussed in Sec. 7.1.1), we would instead like to develop a realistic scheme to achieve this $\mathcal{O}(d)$ improvement in performance, which exhibits the properties of a good choice of probe state (outlined in Sec. 7.1.2). We consider here the possibility of using squeezed-coherent states like the ones in Sec. 7.1 to achieve this goal.

Firstly, a squeezing-based realization of the type-(1) strategy would need to have squeezing and displacement operations in d experiments to estimate $\lambda_1, \ldots, \lambda_d$. Therefore, let each experiment have power E/d, split equally between the squeezing and displacement operations (i.e., $E/2d$). Hence through the d experiments the total amount of energy is $(E/2d + E/2d) \times d = E$. Now, the variance $\langle \Delta\lambda_1^2 + \ldots + \Delta\lambda_d^2 \rangle$ is of the order of

$$\frac{1}{\alpha^2 e^{2r}} \times d = \frac{1}{(E/2d)(4 \times E/2d)} \times d = \frac{d^3}{E^2}.$$

Therefore, the precision is of the order d^3/E^2.

On the other hand, if there is an $\mathcal{O}(d)$ improvement to be had we must consider using entanglement between the frequency channels. Such entanglement, which is a non-linear property can be achieved with current technology using a *frequency-comb*

entangled state [109, 110]. A special OPO called the SPOPO can be used to generate a multiple set of squeezed fields. In the squeezing-based realization of the type-(2) strategy the goal is to estimate the d displacement operations $\lambda_1, \ldots, \lambda_d$ (see Sec. 7.2) using a single squeezing operation. Suppose that the squeezing operation has power $E/2$ while $E/2d$ power is given to each displacement operation, so that the total amount of energy is $E/2 + (E/2d) \times d = E$. The variance $\langle \Delta\lambda_k^2 \rangle$ will then be of order $1/\alpha^2 e^{2r} = 1/(E/2d)(4 \times E/2)$, hence the total variance $\langle \Delta\lambda_1^2 + \ldots + \Delta\lambda_d^2 \rangle$ is of the order of

$$\frac{1}{\alpha^2 e^{2r}} \times d = \frac{1}{(E/2d)(4 \times E/2)} \times d = \frac{d^2}{E^2}.$$

Hence there will be an $\mathcal{O}(d)$ improvement over the type-(1) strategy. However the difficulty here is in developing a squeezed state with the property that it can be used to estimate d displacements each with variance $E/2$ under total energy $E/2$. Whilst investigating this problem we became aware of the work [111]. The essential point there was that if one goes beyond the class of fixed photon number input states (and take average energy as the resource constraint) then for any type-(2) strategy there will always exist a type-(1) strategy at least as good as it (in terms of MSE). This suggests that such an $\mathcal{O}(d)$ enhancement in the class of squeezed and coherent states is not possible. It also raises questions over the efficacy of the result [99], as well as our results in Sec. 7.3. Frequency entangled states are seemingly only advantageous within the class of fixed photon number states. The critical question is therefore: is it physically relevant to consider only fixed total particle number probe state? In quantum optics indefinite photon number states are very natural (e.g coherent states), therefore the answer to this question is most likely negative.

7.4 Open Problem: Optimising the Input Over Frequency

A problem for future research is the general multiple parameter set-up and how to optimise over the frequency of input states. In the one-parameter case, it was understood that the best strategy was a monochromatic probe state. For d-parameters,

this problem is much more subtle. Although it is expected that it d-frequency probe state is the best strategy it is not clear how to choose the frequencies. For example, for each unknown parameter there is an optimal frequency in the single-parameter model but when d of these are combined into a d-parameter model it may be the case that a different choice of frequencies may indeed work better. We see an example of this now.

Example 19. *Consider the one-mode SISO PQLS characterised by unknown parameters (c, Ω), which we would like to estimate. Consider also the setup from Sec. 7.2.2 where the input is supported on two frequency modes, with frequencies ω_1 and ω_2. Also, as in Sec. 7.2.2 suppose that the coherent inputs have real amplitudes and the squeezed inputs are momentum-squeezed. We assume for simplicity that the energy of the input supported on each frequency is the same (i.e. $E/2$) and $E_{\text{coherent}} = E_{\text{squeezed}}$ on each channel. Let us optimise over the frequencies ω_1 and ω_2 under a fixed energy constraint using a momentum measurement on each mode.*

Firstly, the optimal frequencies for the single parameter experiments to estimate either c or Ω are given by $\omega = \Omega \pm \frac{1}{2}|c|^2$ or $\omega = \Omega$, respectively (i.e. minimising the MSE (7.6) with respect to a total energy constraint as in Sec. 7.1.2).

On the other hand the Fisher Information for the setup here is given by

$$F(|c|^2, \Omega|\omega_1, \omega_2) = \frac{E^2}{4} \begin{pmatrix} p_1^2+p_2^2 & p_1q_1+p_2q_2 \\ p_1q_1+p_2q_2 & q_1^2+q_2^2 \end{pmatrix},$$

where

$$p_i := \frac{-|c|^2}{(\Omega-\omega_i)^2 + \frac{1}{4}|c|^4} \quad \text{and} \quad q_i := \frac{(\Omega-\omega_i)}{(\Omega-\omega_i)^2 + \frac{1}{4}|c|^4}.$$

We have also chosen for convenience to estimate $|c|^2$, which can be done without loss of generality because the phase is not identifiable from the transfer function (see Example 9 or Corollary 1). It follows that the MSE in this case is given by

$$\begin{aligned} &M(|c|^2, \Omega|\omega_1, \omega_2) := \operatorname{Tr}(F(|c|^2, \Omega)^{-1}) \\ &= \frac{4}{E^2} \times \frac{(|c|^4 + (\Omega-\omega_1)^2)\left(\frac{1}{4}|c|^4 + (\Omega-\omega_2)^2\right) + (|c|^4 + (\Omega-\omega_2)^2)\left(\frac{1}{4}|c|^4 + (\Omega-\omega_1)^2\right)}{\left(\frac{1}{4}|c|^4 + (\Omega-\omega_1)^2\right)^2 \left(\frac{1}{4}|c|^4 + (\Omega-\omega_2)^2\right)^2}. \end{aligned}$$

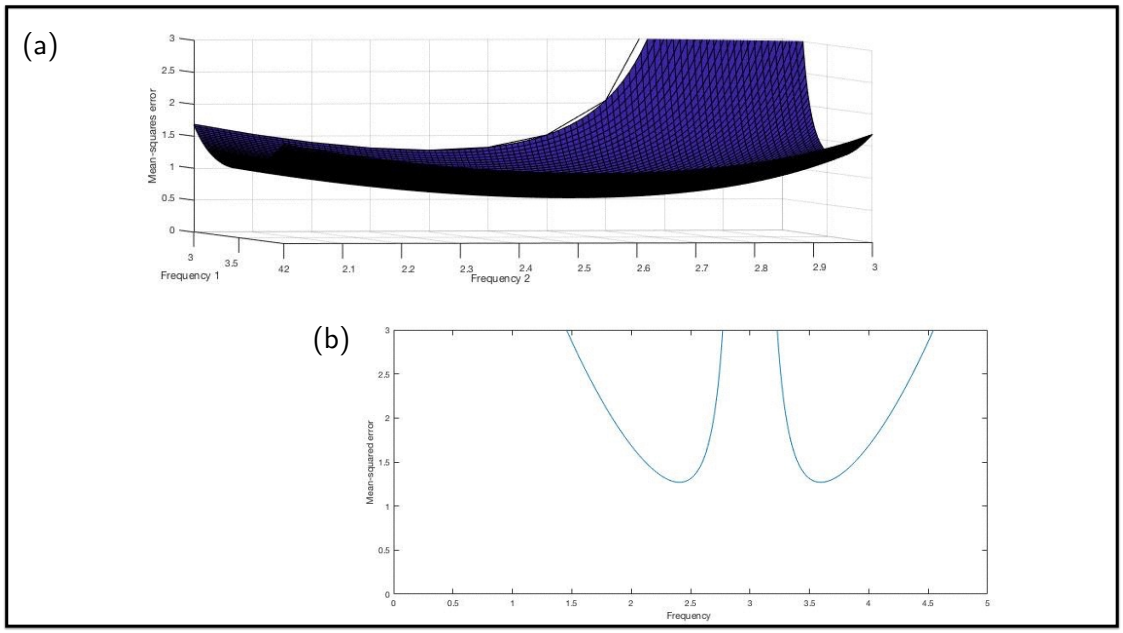

FIGURE 7.8: (a): Plot of the MSE as a function of frequencies (ω_1, ω_2). (b) Plot of MSE with one of frequencies fixed at $\omega = 3$.

Suppose that the true values of the parameters are $|c|^2 = 1$ *and* $\Omega = 3$. *A plot of* $M(1, 3|\omega_1, \omega_2)$ *is given in Fig. 7.8 (a) as a function of the frequencies* (ω_1, ω_2). *It is clear from the diagram that the minimum values of the MSE is not at* $(3, 3 \pm 0.5)$, *as would be the case for the single parameter experiments. In fact, using a numerical solver a global minimum can be found at* $(3.4278, 2.5722)$ *(note that another can be found by switching* $\omega_1 \longleftrightarrow \omega_2$*). Furthermore, suppose that we fix the parameter* $\omega_1 = 3$, *which recall is the optimal choice in the single parameter experiment for estimating* Ω. *A plot of the function* $M(1, 3|3, \omega)$ *as a function of frequency* ω *is given in Fig. 7.8 (b). Observe that the minima deviate from* $\omega = 3 + 0.5$*; they are actually given by* $\omega = 3 \pm 2^{-3/4}$.

7.5 Conclusion

In this chapter we have developed a method allowing us to identify unknown parameters (i.e., single and multiple parameters) of a given PQLS at the Heisenberg limit using squeezed states. The emphasis was on realistic Heisenberg detection schemes.

In order to achieve such large estimation precision one exploits the decreased uncertainty in one of the quadratures that squeezed states possess. The action of the PQLS is a displacement, which can be detected by performing homodyne detection at the output. We are not currently aware of any other strategy in the literature achieving the Heisenberg limit for general PQLSs (other than the single parameter SISO case, which is essentially equivalent to the the standard metrology scheme). We found the optimal state of squeezed-coherent type for the single parameter case. Also for the the single parameter case a MIMO example for two atomic ensembles was given, where a particular parameter determines whether or not a macroscopic system possesses entanglement. The parameter values are typically very small and, as a zero value corresponds to no entanglement, distinguishing it from zero is crucial. Therefore high precision is required. A possible experimental set-up was also given.

We have extended the result of [99] to SISO PQLSs, by showing there is an $\mathcal{O}(d)$ advantage by estimating d parameters using frequency entangled states versus the alternative of frequency separable states. We pointed out that their results and ours are only valid under the assumption of fixed photon inputs, which ultimately led to our failure in developing an analogous realistic scheme using Gaussian states. It still remains an open problem whether frequency entangled states offer any advantage from a metrological point of view, even in the SISO case. By the results of [111] it is clear that simply estimating the phases at different frequencies (i.e the $\lambda(\omega|\theta)$s rather than the θs) there is no advantage. However this does not necessarily imply that there cannot be an advantage in estimating the θs.

We outlined various open problems in Secs. 7.3.3 and 7.4 concerned with the optimisation problem in the multiple parameter case and allowing for optimisation over frequency, respectively. Finally another interesting open problem is to extend this work to active quantum linear systems (AQLS), where system identification remains an open problem to-date.

Chapter 8

Feedback Control Methods for Parameter Estimation in QLSs

In Ch. 7 we considered parameter estimation for PQLS under an energy resource constraint. In this chapter, we take time as our main resource and consider the same estimation goals.

In general, information about a QLS (or a parameter therein) is obtained at a linear rate with respect to time, as evidenced by the result in Sec. 6.11. However, we shall see that when the eigenvalues of the system matrix A (or equivalently the poles of the transfer function) are close to the imaginary axis, so that the system destabilises, the QFI is enhanced and scales quadratically with the observation time. Being more precise the QFI scales as $T_{\text{tot}}^{2(1-\epsilon)}$ and is valid for observation times of the order $T_{\text{tot}} = \tau^{\frac{1}{1-\epsilon}}$, where τ is the correlation time (or stabilisation time). The constant $\epsilon > 0$ essentially ensures that the system can be considered stationary during the experiment (see Sec. 8.1.3). For times much longer than the correlation time the linear scaling will be restored.

In our setup the enhancement in precision arises from the internal system being **almost** decoherence-free. More generally, a *decoherence-free subsystem* [32, 79] is part of the system that doesn't feel the effect of the environment (noise) and evolves as a closed system. The study of DFSs has been a fruitful subject in recent years; there are a vast array of applications, such as *quantum computation* [113], *quantum memories* [36, 114] and *quantum metrology* [115, 116] (see also [32] for a study in the context of QLSs). Our results highlight further the importance of DFSs as a resource for quantum metrology. This Heisenberg-level scaling with respect to time was also

observed in [79, 115] for non-linear quantum systems when the system undergoes a *dynamical phase transition* (DPT). A DPT is a singular change in the dynamics associated with the vanishing of the spectral gap. In particular, the system displays an intermittent behaviour, switching between periods of high and low emission rates. We discuss this in greater detail in Sec. 8.2.6.

Firstly, we consider using time-dependent inputs in PQLSs and give an adaptive procedure to obtain the 'Heisenberg level' scaling when one (or more) of the poles are very close to the imaginary axis (Sec. 8.2). An adaptive procedure is necessary because at each stage the optimal frequency of the input depends on the unknown parameter. We give two feedback methods enabling one to destabilise a PQLS. The feedback methods are based on either isolating one mode in the system or even the entire system (so that all poles are close to the imaginary axis in this case). The method of isolating the entire system is the most straightforward and is achieved by increasing the reflectivity of the mirrors coupling the field(s) to the system using beam-splitters, which should be achievable in practice. The method of destabilising one mode is perhaps more ambitious and is facilitated with coherent feedback. The final ingredient in a metrological protocol is a suitable choice of measurement. We show that simple (adaptive) homodyne detection works here.

Finally, we consider using stationary inputs as a resource for quantum metrology for PQLSs in Sec. 8.3. We show again that an unstable PQLS results in Heisenberg time scaling with respect to the QFI.

8.1 Problem Formulation and Preliminary Investigation

We saw in Ch. 3 that in linear systems theory one can only access the system using probe states and measurements via the field. Therefore, any metrological scheme will be *indirect* in this sense. This situation is contrary to the quantum metrology setup in Sec. 4.2, where one is able to *directly* estimate system parameters with states and measurements on the system (see Fig. 8.1). Let us now undertake a preliminary investigation to draw comparisons between direct and indirect metrology.

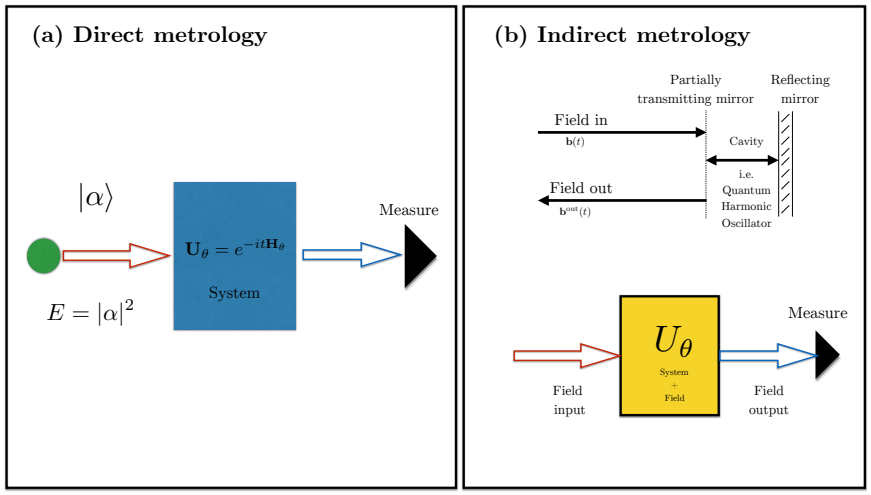

FIGURE 8.1: Comparison between direct and indirect metrology setups. In the direct setup, (a), the state evolution is closed and evolves unitarily. In the indirect metrology setup, (b), the system in (a) is coupled with an ancillary system, which can be prepared in an arbitrary state. As the information about θ leaks into the ancilla it can be measured. Here the ancilla system is a Bosonic bath.

8.1.1 Direct Metrology

Firstly we look at the direct metrology protocol.

Consider the following closed system evolution: suppose that we have a continuous variables system, which is represented by a mode $\mathbf{a}$ satisfying the usual CCR $\left[\mathbf{a}, \mathbf{a}^\dagger\right] = 1$. Also, assume that system evolves under the Hamiltonian $\mathbf{H}_\theta := \theta \mathbf{a}^\dagger \mathbf{a}$ for a period of time t. In other words the evolution of the system is described by the unitary operator

$$\mathbf{U}_\theta = e^{-i\theta t \mathbf{a}^\dagger \mathbf{a}}.$$

Suppose that the parameter θ is unknown and we would like estimate it (see Fig. 8.1).

Let us probe the system with a coherent state of amplitude α, hence energy $E = |\alpha|^2$. After time t, the state evolves to a coherent state of amplitude $\alpha e^{-i\theta t}$, i.e, the action is a rotation in the complex plane. How sensitive this rotation is to changes in θ characterises the eventual performance of any measurement. We can

calculate this performance using the QFI (see Sec. 4.1), hence by Eq. (4.4) we have

$$\begin{aligned} F_d(\theta) &= 4\mathrm{Var}\left(t\mathbf{a}^\dagger\mathbf{a}\right) \\ &= 4t^2E. \end{aligned} \tag{8.1}$$

Notice that $F_d(\theta)$ scales quadratically with time[1]. Furthermore, adaptive homodyne measurements can be shown to attain the QFI bound asymptotically.

8.1.2 Indirect Metrology

If instead we perform an indirect measurement by coupling with a Bosonic field and performing measurements on the field to estimate θ, then it is expected the the QFI in this case will be worse. That is, not all information is expected to be transferred to the field and we get information loss. The restriction that we must measure indirectly, rather than directly, is one that is encountered generally in linear quantum systems theory as direct access to the system is not possible. In fact in this instance we have a passive QLS (under the usual rotating wave and Markov approximations) and in particular a cavity (see Example 1).

Now let us show explicitly that the indirect strategy is worse than the direct one. Suppose that we have a QLS that is characterised by coupling parameter $c \in \mathbb{R}$ and Hamiltonian $\Omega \in \mathbb{R}$. Note that both parameters are identifiable in the sense of Definition 8. Suppose that we would like to estimate Ω (with c assumed to be known). Using a coherent probe state of one frequency[2] then the QFI is given by (see Eq. (7.3))

$$\begin{aligned} F_{ind}(\Omega|\omega_{\mathrm{opt}}) &= 4E\max_{\omega}\left|\frac{d\Xi(-i\omega)}{d\Omega}\right|^2 \\ &= 4E\max_{\omega}\frac{c^4}{\left((\omega-\Omega)^2+\frac{1}{4}c^4\right)^2} \qquad (8.2) \\ &= 64E\frac{1}{c^4}, \qquad (8.3) \end{aligned}$$

[1] We are not interested in the scaling with energy here, but just note that this precision can be further improved by using CAT states for example (see Sec. 4.2)).

[2] Recall from Sec. 7.1.1 that one frequency is optimal [5]

which is less than (8.1) in general[3]. We now discuss a toy model that suggests that it may be possible to do considerably better than (8.3) using an adaptive approach facilitated by feedback.

8.1.3 Toy Model

Consider again the one mode passive SISO system above. Suppose that we have a fixed energy resource, E and time resource, T_{tot}, for metrology. Further, suppose that we are also allowed to choose the value of c. Although this may seem artificial, later we will give two feedback schemes designed to implement this.

Choose c such that $c^2 = \mathcal{O}(T_{\text{tot}}^{-(1-\epsilon)})$, and consider running the experiment for a time T_{tot}. Observing the experiment over the time interval $[T_{\text{tot}}^{1-\epsilon}, T_{\text{tot}}]$ (note here we are taking T_{tot} to be sufficiently large so that the width of the interval $[T_{\text{tot}}^{1-\epsilon}, T]$ is much greater than the width of the interval $[0, T_{\text{tot}}^{1-\epsilon}]$ and the system has reached stationarity over $[T_{\text{tot}}^{1-\epsilon}, T_{\text{tot}}]$ (see Sec. 3.8). It follows from Sec. 8.1.2 that the optimal QFI is proportional to $ET_{\text{tot}}^{2(1-\epsilon)}$. The upshot is that one achieves (almost) the same scaling for estimation of the Hamiltonian parameter as when you have direct access to the closed system. The advantage here is that it achieves this scaling indirectly (via the field).

A potential caveat here is that we need to prepare an input state (of coherent-type) on a frequency that is unknown. We can overcome this difficulty by using an adaptive procedure.

Adaptive procedure:

- Step 1 (Initial experiment): Run a prior experiment using the QLS to obtain a rough estimator for our unknown parameter using time resources $T_1 = \frac{T_{\text{tot}}}{3}$. That is, probe the system with a monochromatic coherent state (of any frequency) with total energy $E_1 := \tilde{E}T_1$, where $\tilde{E}$ is the energy density. It follows from above that the QFI is given by

$$F^{(1)}(\Omega) \propto \tilde{E}T_{\text{tot}}$$

[3]Note that in order to obtain this large QFI one must run the experiment for a time $t \gg 1/c^2$ so that the system stabilises (see Sec. 3.8). On this long time scale the input-output dynamics become unitary in the frequency domain.

Perform a measurement to obtain an estimator of Ω with error $\mathbb{E}\left[(\Omega - \hat{\Omega}_1)^2\right] = \mathcal{O}\left(\frac{1}{T_{\text{tot}}}\right)$.

- Step 2 (Feedback 1): Now run a second experiment using the QLS for a time $T_2 = \frac{T_{\text{tot}}}{3}$. Choose the coupling parameter to be $\hat{c}_2$ so that $|\hat{c}_2|^2 = \mathcal{O}\left(\frac{1}{\sqrt{T_{\text{tot}}}}\right)$. Probe the system with a monochromatic coherent state of frequency $\hat{\Omega}_1$ with total energy $E_2 := \tilde{E}T_2 = E_1$. Since $\hat{\Omega}_1$ varies form the true value of Ω by $\mathcal{O}\left(\frac{1}{T_{\text{tot}}}\right)$, then the QFI at this stage is

$$\begin{aligned} F^{(2)}(\Omega) &= 4E_2 \left|\frac{d\Xi(-i\omega)}{d\Omega}\right|^2\Bigg|_{\omega=\hat{\Omega}_1} \\ &\propto \tilde{E} \cdot T_{\text{Tot}}^2 \end{aligned}$$

Perform a measurement to obtain an estimator of Ω with error $\mathbb{E}\left[(\Omega - \hat{\Omega}_2)^2\right] = \mathcal{O}\left(\frac{1}{T_{\text{Tot}}^2}\right)$.

- Step 3 (Feedback 2): Now run a third experiment using the QLS for a time $T_3 = \frac{T_{\text{tot}}}{3}$. Choose the coupling parameter to be $\hat{c}_3$ so that $|\hat{c}_3|^2 = \mathcal{O}\left(\frac{1}{\left(\sqrt{T_{\text{Tot}}^2}\right)^{1-\epsilon}}\right)$. Probe the system with a monochromatic coherent state of frequency $\hat{\Omega}_2$ with total energy $E_3 := \tilde{E}T_3 = E_1 = E_2$. Since $\hat{\Omega}_2$ varies form the true value of Ω by $\mathcal{O}\left(\frac{1}{T_{\text{Tot}}^2}\right)$, then the QFI at this stage is

$$\begin{aligned} F^{(3)}(\Omega) &= 4E_3 \left|\frac{d\Xi(-i\omega)}{d\Omega}\right|^2\Bigg|_{\omega=\hat{\Omega}_2} \\ &\propto E_3 \cdot T_{\text{Tot}}^{2(1-\epsilon)} \end{aligned}$$

Perform a measurement to obtain an estimator of Ω with error $\mathbb{E}\left[(\Omega - \hat{\Omega}_3)^2\right] = \mathcal{O}\left(\frac{1}{E_3 T_{\text{Tot}}^2}\right)$.

In this procedure we have split the total time into three experiments of equal lengths. In each experiment we have chosen the coupling so that $|c^2|$ is proportional

to the square root of the MSE from the previous step (we discuss this relationship shortly). By adaptively tuning the frequency in each step, one is able to increase the sensitivity of the current step; at each stage the sensitivity is improved by a polynomial factor of T_{tot}. Crucially this procedure doesn't rely on the (circular) assumption about prior knowledge of the unknown parameter at the start of the subsection. The reader may be wondering whether this procedure can be continued to any power of T_{tot}. However, any further stage would require a smaller coupling to have any hope of improving precision, which in turn would require a longer time to stabilise (see Sec. 3.8 for the definition of stabilisation time) and so any improvement would therefore be lost (see Sec. 8.2.6 for a further discussion). Indeed, in each stage the coupling is decreased until in stage 3 when it reaches the smallest possible level so that the experiment still stabilises in time T_{tot} (recall that the system is stationary over the interval $[T_{\text{tot}}^{1-\epsilon}, T_{\text{tot}}]$). It shouldn't be too surprising that we cannot improve the precision any further given our discussion on indirect metrology versus direct metrology. Finally, the reason why the coupling is chosen so that $|c^2|$ is proportional to the square root of the MSE from the previous step is because $\left|\frac{d\Xi(-i\omega)}{d\Omega}\right|^2$ is largest when ω is chosen to that $(\omega - \Omega)$ and $|c|^2$ are of the same order (see Eq. (8.3)).

In summary, we have seen one example of an enhancement in precision arising from the internal system being **almost** decoherence-free. This method will work provided there exists a feasible method to vary the coupling and that a measurement can be found at each step realising the QFI scaling (we see both in the following).

8.2 Feedback Method for PQLSs; Time-Dependent Approach

In the following, we will extend the adaptive approach from Sec. 8.1 to general PQLSs. We will design two feedback methods allowing implementation of this toy model and the one we develop for PQLSs in a physically meaningful way. Finally, we show that a homodyne measurement will enable us to achieve the desired bounds.

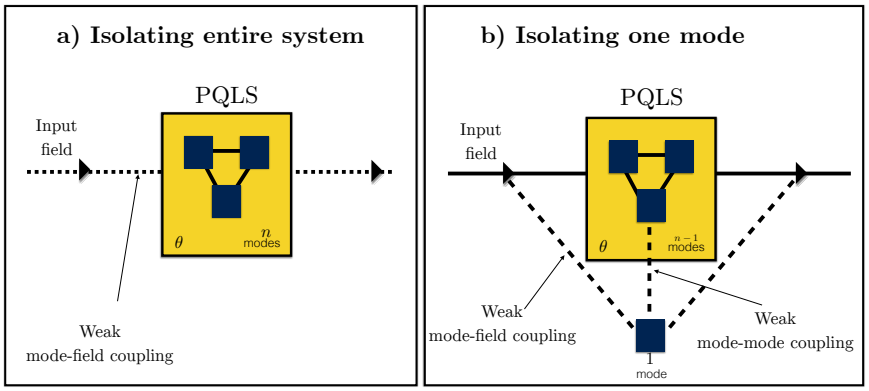

FIGURE 8.2: In a) the entire system has a small coupling with the field, whereas in b) one mode is weakly coupled with the field.

8.2.1 Adaptive Procedure

Recall that in the example given in Sec. 8.1 the main idea was to destabilise the system and create a system that is almost isolated from the field. We now discuss two possible generalisations of this to arbitrary PQLSs.

Isolating the Entire System

One was to generalise this is the following: consider the system

$$\mathcal{G} = (C = (\delta_1, ..., \delta_n), \Omega), \tag{8.4}$$

where all parameters depend implicitly on one unknown parameter, θ, that we would like to estimate (see Fig. 8.2 (a)). We assume that all column vectors δ_i are sufficiently small (in a sense to be defined later). The result is that all poles of the transfer function of this system will be close to the imaginary axis.

Isolating One Mode

Alternatively, a more interesting setup is to isolate and destabilise one mode within the subsystem. Consider the setup in Fig. 8.2 (b). We assume that one of the n modes has both small direct (mode-field) and indirect (mode-mode) couplings. The

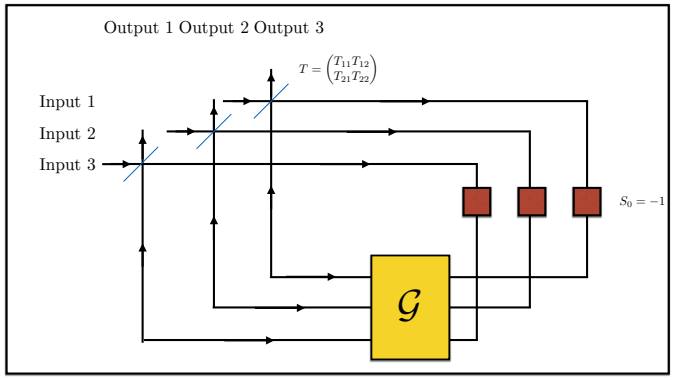

FIGURE 8.3: The setup in Sec. 8.2.2 where the PQLS (in this figure shown with three input channels) is placed in a circuit with beam-splitters in reduce the overall coupling

notion of 'small' will be made more precise later. Such a system is characterised by

$$\mathcal{G} = \left(C = (c_1, ..., c_{n-1}, \delta_1) := (c, \delta_1), \Omega = \begin{pmatrix} \Omega_1 & \delta_2 \\ \delta_2^\dagger & \Omega_2 \end{pmatrix} \right), \tag{8.5}$$

where all parameters depend implicitly on one unknown parameter, θ, that we would like to estimate. Here $\Omega_1, \delta_2, \Omega_2, \delta_1$ and c_i are $n-1 \times n-1, n-1 \times 1, 1 \times 1, m \times 1$ and $m \times 1$ matrices, respectively. Note the similarities with the independent oscillator canonical form in [17].

In both of these setups the key feature is that there is a quasi-DFS within the system [32]. We saw one example in Sec. 8.1 where this sort of scenario was advantageous for estimation; we see shortly that this is also true in general.

8.2.2 Feedback Method 1

We now design a feedback method enabling us to isolate the whole system, that is, drive it to the form (8.4). Our method is basically to increasing the reflectivity of the mirrors coupling the field(s) to the system using beam-splitters.

Consider the setup in Fig. 8.3 where each input and corresponding output are one of the outputs and inputs respectively of a beam-splitter. Also there is a phase

transformation on each channel as in the diagram. The result of adding these beam-splitters is the transformation

$$C \mapsto C \times \left(T_{12}(T_{22}+1)^{-1}\right) \tag{8.6}$$

$$S = 1 \mapsto \left(T_{11} - T_{12}(T_{22}+1)^{-1}T_{21}\right) 1 \tag{8.7}$$

and Ω remains unchanged. We have assumed here that all m beamsplitters are identical and are described by a 2×2 unitary (T_{ij}) and all phases are given by $S_0 = -1$ see [21, Chapter 5]. To calculate this, one uses the *Feedback reduction rule* [117] (see [21] for the calculation in the SISO case).

Now letting

$$T = \begin{pmatrix} \cos(\phi) \sin(\phi) \\ -\sin(\phi)\cos(\phi) \end{pmatrix}$$

it follows that in the limit of ϕ small the overall result of the beam-splitters is $C_{ij} \mapsto C_{ij} \times \phi/2$. Hence we are free to make C as small as we like.

Remark 12. *As a result of the feedback there is a nuisance phase scattering in the field (see Eq. 8.7). However, since it is known (as it is the choice of the experimenter) it can be removed with a phase shifter in the field.*

Now let us show how the adaptive procedure in Sec. 8.1.3 can be used with this feedback method. For simplicity, let us assume that the system is SISO (if it isn't then one can obtain a SISO system by setting $\phi = 0$ in $n-1$ of the beam-splitters). As in Sec. 8.1.3, split the time into three equal parts and choose ϕ so that the all coupling parameters are proportional to the fourth root of the MSE from the previous step. Therefore, after step 1 we have $\mathbb{E}\left[\left(\theta - \hat{\theta}_1\right)^2\right] = \mathcal{O}\left(\frac{1}{T_{\text{tot}}}\right)$ and we choose the coupling in step 2 as $C_2 = \mathcal{O}(T_{\text{tot}}^{-1/4})$. Writing the transfer function in terms of the poles as

$$\Xi_\theta(-i\omega) = \frac{(-i\omega + \overline{z}_1)}{(-i\omega - z_1)} \times .. \times \frac{(-i\omega + \overline{z}_n)}{(-i\omega - z_n)}, \tag{8.8}$$

this means that the n poles of the transfer function are at distances $\mathcal{O}\left(\frac{1}{\sqrt{T_{\text{tot}}}}\right)$ from the imaginary axis. Furthermore, given that our estimate of θ is known with error variance $\mathcal{O}\left(\frac{1}{T_{\text{tot}}}\right)$ it follows each of the pole locations are known (or can be estimated using our current estimate of θ) to the same error; we denote such estimates by $\hat{z}_i$.

Now to calculate the QFI we need to evaluate $\frac{d\Xi(-i\omega)}{d\theta}$ at some particular choice of input frequency. If we take the input frequency to be $\text{Im}(-\hat{z}_1)$ it follows that

$$\left.\frac{d\Xi(-i\omega)}{d\theta}\right|_{\omega=\text{Im}(-\hat{z}_i)} = \mathcal{O}\left(\sqrt{T_{\text{tot}}}\right). \tag{8.9}$$

This result follows immediately from the observation that the term

$$\frac{d}{d\theta}\left(\frac{-i\omega+\overline{z}_1}{-i\omega-z_1}\right) = \frac{\dot{\overline{z}_1}(-i\omega-z_1)+\dot{z}_1(-i\omega+\overline{z}_1)}{(-i\omega-z_1)^2}, \tag{8.10}$$

in the derivative is of order $\mathcal{O}\left(\sqrt{T_{\text{tot}}}\right)$, which follows because

$$(-i\omega-z_1)|_{\omega=\text{Im}(-\hat{z}_1)} = (\text{Im}(\hat{z}_1)-\text{Im}(z_1))-\text{Re}(z_1) = \mathcal{O}\left(\frac{1}{\sqrt{T_{\text{tot}}}}\right).$$

The QFI is thus identical to step 2 in Sec. 8.1.3. Step 3 can be developed similarly. Note that evaluating these functions at $\omega = \text{Im}(-\hat{z}_1)$ corresponds to a coherent state of frequency $\text{Im}(-\hat{z}_1)$ and this choice of frequency is crucial here. Note that in calculating Eq. (8.10) it is important that $\dot{z}_1 \neq 0$, otherwise Eq. (8.9) will be $\mathcal{O}(1)$ and the adaptive enhancement is lost.

8.2.3 Feedback Method 2

We now design a feedback method enabling us to isolate one mode within the system; that is, drive it to the form (8.5).

SISO

Consider an arbitrary SISO PQLS (C, Ω) in the setup in Fig. 8.4. We have adapted this into a 2I2O model by adding a new control channel and added a feedback loop (which is assumed to take negligible time). Assume that in this additional control

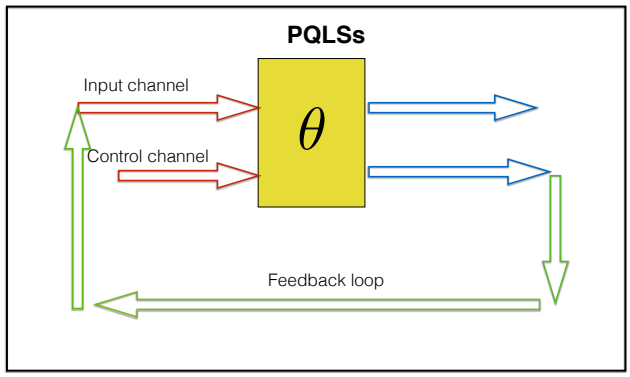

FIGURE 8.4: Feedback setup for method 2.

channel we are able to choose the parameters. A remark that the feedback loop is necessary as it ensures that the resultant model remains SISO. Note that this is an example of a coherent feedback scheme [13, 14] as all connections here are quantum. In particular, there is no measurement on the output of the second channel, but rather it is connected to the first input channel. Coherent feedback strategies such as the one here have been discussed in [14].

Using the feedback reduction rule [21] the resultant model after connecting the feedback loop is given by

$$\left(C + D, \Omega + \frac{1}{2i}\left(D^\dagger C - C^\dagger D\right)\right),$$

where D is the $1 \times n$ matrix of control parameters corresponding to the extra channel. In our method, the goal is to choose the n control parameters in D so that the resultant SISO model is of the form (8.5). This means that both

$$\Omega_{jn} + \frac{1}{2i}\left(\overline{d}_j c_n - \overline{c}_j d_n\right) \text{ for } 1 \leq j \leq n-1, \tag{8.11}$$

$$c_n + d_n \tag{8.12}$$

need to be small.

Let us understand how the adaptive method in Sec. 8.1.3 can be combined with this feedback method to obtain enhanced scaling. As in Sec. 8.1.3 split time into three equal parts. Step 1 is the same as Sec. 8.1.3, meaning that we can estimate θ

with MSE $\mathcal{O}\left(\frac{1}{T_{\text{tot}}}\right)$. Consider the following choice of feedback:

$$d_n = -\hat{c}_n \tag{8.13}$$

$$\overline{d}_j = \frac{\hat{\overline{c}}_j(-\hat{c}_n) - 2i\hat{\Omega}_{jn}}{\hat{c}_n} \text{ for } 1 \leq j \leq n-1, \tag{8.14}$$

where $\hat{c}_n$ and $\hat{\Omega}_{jn}$ are estimators of the c_n and Ω_{jn}, which describe the direct and indirect coupling to the nth mode. Also label $\hat{c}_i$ for $i \neq n$ as the estimators of the couplings c_i to the other modes. These can be estimated to a MSE $\mathcal{O}\left(\frac{1}{T_{\text{tot}}}\right)$ because they are determined by θ. Recall our adaptive procedure for the toy example where it was best to choose $|c|^2$ and $(\omega - \Omega)$ to be of the same order (rather than c and $(\omega - \Omega)$). In light of this, in step 2 of the adaptive procedure we choose the direct and indirect coupling to the nth mode (eq. (8.11) and (8.12)) to be proportional to $\mathcal{O}\left(\frac{1}{T_{\text{Tot}}^{1/4}}\right)$. This entails using our estimates $\hat{c}_n$ and $\hat{\Omega}_{jn}$ (for $j \neq n$), which have MSE $\mathcal{O}\left(\frac{1}{T_{\text{tot}}}\right)$, and modifying them as $\hat{c}_n \mapsto \hat{c}_n + \frac{1}{T_{\text{Tot}}^{1/4}}, \hat{\Omega}_{jn} \mapsto \hat{\Omega}_{jn} + \frac{1}{T_{\text{Tot}}^{1/4}}$. The upshot is that $\hat{c}_n$ and $\hat{\Omega}_{jn}$ will have MSE $\mathcal{O}\left(\frac{1}{\sqrt{T_{\text{tot}}}}\right)$ and the couplings (8.11) and (8.12) will be small and of the order $\mathcal{O}\left(\frac{1}{T_{\text{Tot}}^{1/4}}\right)$.

Now, consider the transfer function of the resultant system given by (8.5), which is

$$\Xi_\theta = \frac{\text{Det}\left(-i\omega + i\Omega - \frac{1}{2}C^\dagger C\right)}{\text{Det}\left(-i\omega + i\Omega + \frac{1}{2}C^\dagger C\right)} := \frac{\text{Det}(A)}{\text{Det}(B)}.$$

This has derivative:

$$\frac{d\Xi_\theta}{d\theta} = \frac{\text{Det}(A)'\text{Det}(B) - \text{Det}(A)\text{Det}(B)'}{\text{Det}(B)^2}.$$

Observe that $\text{Det}\left(-i\hat{\omega} + i\Omega \pm \frac{1}{2}C^\dagger C\right) = \text{const} \times \frac{1}{\sqrt{T_{\text{tot}}}}$, where $\hat{\omega}$ is the estimator of Ω_2 in Eq. (8.5), which has MSE $\mathcal{O}\left(\frac{1}{T_{\text{tot}}}\right)$ from step 1 (see remark 13). This can be

seen by writing

$$\mathrm{Det}\left(-i\omega + i\Omega \pm \frac{1}{2}C^\dagger C\right) = \left(-i\omega + i\Omega_2 \pm \frac{1}{2}\delta_1^\dagger\delta_1\right) \times \\ \mathrm{Det}\left(-i\omega + i\Omega_1 \pm \frac{1}{2}c^\dagger c - \frac{\left(i\delta_2 \pm \frac{1}{2}c^\dagger\delta_1\right)\left(i\delta_2^\dagger \pm \frac{1}{2}\delta_1^\dagger c\right)}{-i\omega + i\Omega_2 \pm \frac{1}{2}\delta_1^\dagger\delta_1}\right). \tag{8.15}$$

Therefore it follows that $\left|\frac{d\Xi_\theta}{d\theta}(-i\hat{\omega})\right|^2 = \mathcal{O}\left(T_{\mathrm{tot}}\right)$[4], as in step 2 of the adaptive procedure. Step 3 can be developed similarly.

Remark 13. *As a result of the feedback there is a second term contributing to the Hamiltonian. That is, we have* $\Omega_2 = \Omega_{nn} + \frac{1}{2i}\left(\overline{d}_n c_n - \overline{c}_n d_n\right)$*. Therefore, our estimator should be chosen as* $\hat{\Omega}_{nn} + \frac{1}{2i}\left(\overline{d}_n \hat{c}_n - \overline{\hat{c}}_n d_n\right)$*, rather than simply* $\hat{\Omega}_{nn}$*. As* c_n *and* Ω_{nn} *can be estimated with a MSE* $\mathcal{O}\left(\frac{1}{T_{\mathrm{tot}}}\right)$ *from step 1, therefore the term* $\left(-i\omega + i\Omega_2 \pm \frac{1}{2}|\delta_1|^2\right)$ *will be of order* $\mathcal{O}\left(\frac{1}{\sqrt{T_{\mathrm{tot}}}}\right)$*, as required.*

Remark 14. *This method of feedback can also be used to implement the toy example in Sec. 8.1.3. In that case the extra channel is used to modify the coupling only.*

MIMO

The above theory also holds in the case of MIMO systems, but there are a few subtleties to be aware of.

Consider a PQLS (C, Ω) coupled to m fields. The coupling matrix to the nth mode is now a column vector of size m, so there are now m direct coupling parameters and $n-1$ indirect coupling parameters to control. To account for the increase in direct parameters we use m control channels (rather than one).

Using the feedback reduction rule [21], the resultant model following feedback is given by

$$\left(C + D, \Omega + \frac{1}{2i}\left(D^\dagger C - C^\dagger D\right)\right),$$

[4]Provided that Ω_2 depends on θ.

where D is an $m \times n$ matrix of control parameters. This is identical to the SISO case except that the number of rows in D has increased to m. The goal, as before, is to make the (direct and indirect) coupling to the nth mode small. Choosing the feedback parameters to be

$$d_{jn} = -\hat{c}_{jn} \text{ for } 1 \leq j \leq m \tag{8.16}$$

$$\overline{d}_{1j} = \frac{\sum_{k=1}^{m} \hat{\overline{c}}_{kj} \left(-\hat{c}_{kn}\right) - 2i\hat{\Omega}_{jn}}{\hat{c}_{1n}} \text{ for } 1 \leq j \leq n-1, \tag{8.17}$$

it follows that the direct coupling to the weak mode will be given by

$$c_{jn} - \hat{c}_{jn} \text{ for } 1 \leq j \leq m \tag{8.18}$$

and the indirect coupling is given by

$$\Omega_{jn} - \hat{\Omega}_{jn}\frac{c_{1n}}{\hat{c}_{1n}} + \frac{1}{2i}\left(c_{1n}\left(\overline{c}_{1j} - \hat{\overline{c}}_{1j}\right) + \overline{c}_{1j}\left(\hat{c}_{1n} - c_{1n}\right) + \sum_{k=2}^{m} \hat{c}_{kn}\left(\overline{c}_{kj} - \hat{\overline{c}}_{kj}\frac{c_{1n}}{\hat{c}_{1n}}\right)\right). \tag{8.19}$$

The adaptive procedure is then similar to the SISO case (see Appendix J).

Physical Meaning of this Feedback Setup

One question that remains is to understand what it means physically to add an extra control channel? Consider the simplest possible physical example of a linear system, which is an optical cavity. It consists of two mirrors; one that is partially transmitting and one that is perfectly reflecting. Between these mirrors a trapped electromagnetic mode is set up, whose frequency depends on the separation of the mirrors [22]. This can be characterised in the SLH model by a coupling parameter corresponding to the reflectivity of the mirror and a Hamiltonian representing the Hamiltonian of the internal cavity system. This is nothing more than a damped QHO [29]. Now, replacing the reflective mirror with a second partially transmitting mirror where we are able to control it's reflectivity, corresponds mathematically to

adding an extra (control) channel. It is expected that a similar procedure would work for more than one mode.

8.2.4 Other Methods for Synthesising DFSs

Other methods have been given for synthesising DFSs. For instance, in [118] they consider using Hamiltonian control or system-environment coupling control. Further DFSs are considered in detail in [94] and in particular the use of similar coherent feedback methods to ours for driving the system to a DFS; it is shown that for a given QLS there exists a coherent feedback controller achieving the task.

8.2.5 Measurement

Consider a SISO PQLS, we will now show that a homodyne measurement enables one to realise the QFI level of scaling in steps 2 and 3 of our adaptive procedure (homodyne measurements also work for step 1 [5]). Let us look at step 2 (step 3 is similar). Working in the time domain, our coherent input of frequency $\hat{\Omega}_1$ has time-dependent amplitude $\alpha(t) = \alpha e^{-i\hat{\Omega}_1 t}$, where α is a constant. It follows from Eq. (3.13) and (3.14) that the output in the time-domain is a coherent state with amplitude

$$\alpha_{\text{out}}(t) := \Xi(-i\hat{\Omega}_1)\alpha(t) + Ce^{At}\alpha_0 - Ce^{At}(A + i\hat{\Omega}_1)^{-1}C^\dagger\alpha. \tag{8.20}$$

Here α_0 is the initial state of the cavity. Consider performing a homodyne measurement on the integrated mode

$$\frac{1}{\sqrt{T_{\text{tot}} - T_1}} \int_{T_1}^{T_{\text{tot}}} e^{i\hat{\Omega}_1 t}\mathbf{b}^{\text{out}}(t)dt,$$

which is equivalent to a homodyne measurement of the $\hat{\Omega}_1$ frequency mode. On this mode there is a coherent state with amplitude $\frac{1}{\sqrt{T_{\text{tot}}-T_1}} \int_{T_1}^{T_{\text{tot}}} e^{i\hat{\Omega}_1 t}\alpha_{\text{out}}(t)dt$. Now choosing T_1 to be $T_{\text{tot}}^{1-\frac{\epsilon}{2}}$, then the second and third terms in (8.20) will offer little contribution to the integral. The meaning of this is that the system has stabilised

and, as a result, the output is

$$\frac{1}{\sqrt{T_{\text{tot}} - T_1}} \int_{T_{\text{tot}}^{1-\frac{\epsilon}{2}}}^{T_{\text{tot}}} \alpha_{\text{out}}(t)dt = \Xi(-i\hat{\Omega}_1)\alpha\sqrt{T_{\text{tot}} - T_{\text{tot}}^{1-\frac{\epsilon}{2}}} \approx \Xi(-i\hat{\Omega}_1)\alpha\sqrt{T_{\text{tot}}}. \quad (8.21)$$

The action of the system on this mode is thus a unitary rotation, so that homodyne detection would be suitable [100]. Note that we are monitoring the system over the interval $[T_1, T_{\text{tot}}]$ rather than the entire time interval $[0, T_{\text{tot}}]$. Therefore, we are not using all available information, which begs the question whether it may be possible to do even better; we discuss this shortly. Finally, note that homodyne measurements can also be used in the MIMO case, although we do not discuss this here.

Let us now understand why decoherence-free subsystems lead to enhanced scaling. For this we consider the simplest possible model, that is, the cavity setup from Sec. 8.1.2. Let us simplify things further by considering the non-adaptive procedure, which we saw in Sec. 8.1.3. That is, consider a coherent probe with frequency equal to the one unknown parameter Ω and choose the coupling as $|c|^2 = T_{\text{tot}}^{-(1-\epsilon)}$ (so that the system has (approximately) stabilised for $t \in [T_{\text{tot}}^{1-\frac{\epsilon}{2}}, T_{\text{tot}}]$). For time $t \in [T_{\text{tot}}^{1-\frac{\epsilon}{2}}, T_{\text{tot}}]$, the state of the system is a coherent state with mean amplitude

$$\alpha_{\text{sys}}(t) \approx -2\frac{\alpha}{c}e^{-i\Omega t}, \quad (8.22)$$

which has been obtained by using Eq. (3.14). Here α is the amplitude of the input. Therefore by decreasing c we push the poles of the transfer function closer to the origin, essentially destabilising the system. Moreover, as the coupling constant goes to zero we create states of large amplitude in the system. As a result, these increasing amplitude states in the system oscillate for a longer and longer time, so that better information from the signal may be deduced. Furthermore, by writing the transfer function as $\Xi(-i\omega) = e^{i\phi(\Omega)}$ where $\phi(\Omega) = \pi - 2\arctan\left(\frac{2(\Omega-\omega)}{|c|^2}\right)$ and performing a Taylor expansion with respect to Ω and setting $\omega = \Omega$, we have $\phi \approx \pi - 4\Omega T_{\text{tot}}^{1-\epsilon}$. Therefore, according to (8.21) the output over the interval $[T_{\text{tot}}^{1-\frac{\epsilon}{2}}, T_{\text{tot}}]$ is a coherent state with amplitude $(\alpha e^{i\pi})\sqrt{T_{\text{tot}}}e^{-4i\Omega T_{\text{tot}}^{1-\epsilon}} = (Ee^{i\pi})e^{-4i\Omega T_{\text{tot}}^{1-\epsilon}}$. Hence the phase of the output is very sensitive to changes in Ω, just like the direct metrology example from Sec. 8.1.1.

8.2.6 Discussion

Recall our measurement strategy in the previous subsection, where we neglected the outcome of the experiment over the time interval $[0, T_{\text{tot}}^{1-\epsilon/2}]$. Can we improve our precision by considering this interval within the measurement too? More generally, what is the optimum time to run the experiment for?

Consider again estimating the Hamiltonian parameter in a quantum cavity. Let us calculate the QFI over the entire time interval $[0, T_{\text{tot}}]$. Assuming for simplicity that the system initially starts in vacuum and using (8.20), the output state at time t is a coherent state with amplitude

$$\alpha_{out}(t,\omega) = (\Xi(-i\omega)\alpha e^{i\omega t} - e^{At}|c|^2(A+i\omega)^{-1})\alpha, \tag{8.23}$$

where $\alpha e^{-i\omega t}$ is the amplitude of the coherent input with frequency ω. Now, combining (8.23) with the result in Appendix K and setting $\omega = \Omega$, it follows that the QFI over $[0, T_{\text{tot}}]$ is

$$F(\theta) = \int_0^T \left| \frac{d\alpha_{out}(t,\omega)}{d\Omega} \right|^2 \Bigg|_{\omega=\Omega} dt. \tag{8.24}$$

Let us suppose that $|c|^2 = \frac{k}{T_{\text{tot}}}$ for some positive k. Calculating the QFI (8.24) as a function of k gives

$$F(\theta) = 64|\alpha|^2 T_{\text{tot}}^3 \frac{1}{k^2}\left[1 + \frac{1}{k}\left(e^{-k}(-\frac{1}{4}k^2 - \frac{3}{2}k - 2.5) - 2e^{-\frac{1}{2}k}(-k-4) - \frac{11}{2}\right)\right]. \tag{8.25}$$

A plot of this function is given in Fig. 8.5. Firstly, observe that the choice $k = 1$ is optimal and gives a value $F(\theta) \approx 93.26|\alpha|^2 T_{\text{tot}}^3 = 93.26 E T_{\text{tot}}^2$, which corresponds to an experiment length equal to the reciprocal of the spectral gap. Therefore there is an improvement by a factor of $T_{\text{tot}}^{\epsilon}$ over our method. Can we take advantage of this for more general PQLSs? That is, can we adapt our measurement and adaptive strategies? The problem with this is that when $T_{\text{tot}} = \frac{1}{|c|^2}$, the output state has another contribution (which was not present in our calculations) due to the fact that system has not stabilised (see Eq. (8.23)). Therefore, the input-output map will no longer be a unitary rotation so it's not clear how to perform the measurement in practice. That is, will Homoodyne measurement still work or do we need to consider

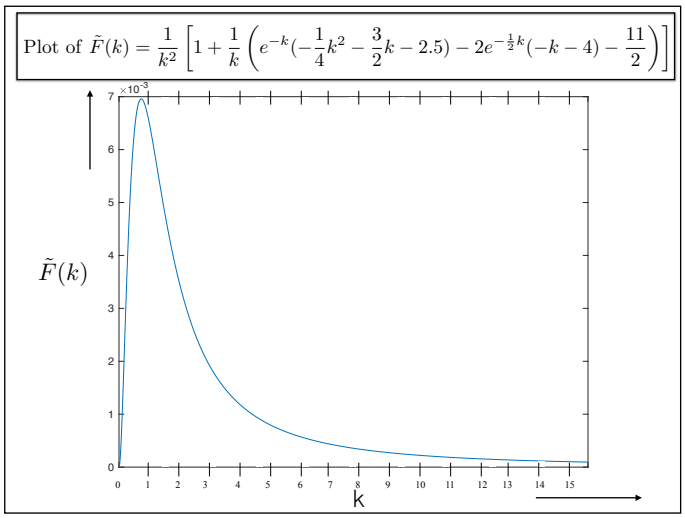

FIGURE 8.5: This figure shows a plot of the QFI as a function of (rescaled) experimental time for the estimation example in Section 8.2.6.

more general general Gaussian measurements, such as Heterodyne [29], to realise this level of precision? This problem is something to consider in future works. Now, the QFI in (8.25) decreases rather quickly with k until

$$F(\theta) \approx 64ET_{\text{tot}}^2 \left(\frac{1}{k^2} - \frac{11}{2}\frac{1}{k^3}\right).$$

In particularly the choice $k = T^{\epsilon}$ recovers the work from the earlier subsections.

8.2.7 Non-Linear DFS Example

The use of decoherence-free subsystems (DFSs) as a resource for parameter estimation has been seen recently in a non-linear context [115]. Let us discuss a very simple example of this. An open quantum system evolves according to the system and field unitary $\mathbf{U}(t)$, which is identical to the one in eq. (3.8). However, the difference with the linear setup is that the system is no longer constrained to be a QHO (note that the field is generally assumed to be a Bosonic bath as in the linear setup). Suppose that we have a is a 2-level system with levels $|0\rangle$ and $|1\rangle$. Let the system Hamiltonian be $\mathbf{H} = \theta\,|0\rangle\langle 0|$ and suppose we have two Bosonic channels with respective coupling

operators $\mathbf{L}_1 = c\,|1\rangle\langle 0|$ and $\mathbf{L}_2 = c\,|0\rangle\langle 1|$ with $c \in \mathbb{R}$. We assume that the field initially starts in vacuum and the initial state of the system is $\rho_{\text{sys}} = |0\rangle\langle 0|$. For more information about the non-linear setup see for example [92].

Now, at some time t_1 the system state will change from $|0\rangle$ to $|1\rangle$ and simultaneously a photon will be emitted into channel 1. Next, the system will change from $|1\rangle$ back to $|0\rangle$ and simultaneously a photon will be emitted into channel 2. This process will repeat indefinitely. We can now fairly straightforwardly write down the joint system-field state as a superposition of all such events. Assuming that the experiment is run for time T_{tot} equal to the inverse of the spectral gap (i.e $1/c^2$), we have

$$\begin{aligned}|\Phi\rangle^{\text{sys}\otimes\text{field}} &= |0\rangle \otimes e^{-i\theta T_{\text{tot}} - \frac{1}{2}} |\text{vac}\rangle |\text{vac}\rangle \\ &+ |0\rangle \otimes \sum_{k=1}^{\infty} \frac{1}{T_{\text{tot}}^k} e^{-\frac{1}{2}} \int_{\mathbb{R}^{2k}} e^{-i\theta(t_1 - t_2 + t_3 - \ldots + t_{2k-1})} |t_1, t_3, \ldots t_{2k-1}\rangle |t_2, t_4, \ldots t_{2k}\rangle \\ &+ |1\rangle \otimes \sum_{k=1}^{\infty} \frac{1}{T_{\text{tot}}^{k-\frac{1}{2}}} e^{-\frac{1}{2}} \int_{\mathbb{R}^{2k-1}} e^{-i\theta(t_1 - t_2 + t_3 - \ldots + t_{2k-1})} |t_1, t_3, \ldots t_{2k-1}\rangle |t_2, t_4, \ldots t_{2k-2}\rangle\,,\end{aligned} \tag{8.26}$$

where $|t_1, t_3, \ldots t_{2k-1}\rangle$ represents the (unnormalised) state of channel 1, with the t_is indicating the photon emission times, (similarly for $|t_2, t_4, \ldots t_{2k}\rangle$) and $|\text{vac}\rangle$ indicates vacuum in the field. Note that the integrals here are taken over the times t_i. Observe that the state has acquired a phase for the times when the system was in state $|0\rangle$. The factor $e^{-\frac{1}{2}}$ is the normalisation factor. The expression (8.26) is called a *Dyson series expansion* [119]. The result of measuring the two output channels will be a series of clicks (see Fig. 8.6) obeying a Poissonian distribution with unit mean and variance.

Suppose that we would like to estimate θ. Depending on parity of the output state the internal system state will be known. Let us calculate the QFI given an even number of photons have been detected. The even output state is given by

$$|\Phi\rangle^{\text{even}} = \frac{1}{\sqrt{p^{\text{even}}}} \sum_{k=1}^{\infty} \frac{1}{T_{\text{tot}}^k} e^{-\frac{1}{2}} \int_{\mathbb{R}^{2k}} e^{-i\theta(t_1 - t_2 + t_3 - \ldots + t_{2k-1})} |t_1, t_3, \ldots t_{2k-1}\rangle |t_2, t_4, \ldots t_{2k}\rangle\,,$$

where p^{even} is the probability that there is a non-zero even number of photons emitted (we have neglected the case of zero photon detections). Now since this state is pure we can use formula (4.4) to compute the QFI. After some straightforward algebra we have

$$F^{\text{even}}(\theta) = 4T_{\text{tot}}^2 \left[\sum_{k=1}^{\infty} e^{-1} \frac{k(k+1)}{(2k+2)!} - \left(\sum_{k=1}^{\infty} e^{-1} \frac{k(2k)}{(2k+2)!} \right)^2 \right]. \tag{8.27}$$

In particular the QFI scales quadratically with time, just as in the linear case.

Suppose now that we know that two photons have been detected (one in each channel). The (normalised) two-photon (2p-)output state is therefore given by

$$|\Phi\rangle^{2\text{p}} = \sqrt{\frac{2}{T_{\text{tot}}^2}} \int_{\mathbb{R}^2} e^{-i\theta t_1} |t_1\rangle |t_2\rangle .$$

Notice that the photon detection time of the photon in the second channel (C2) doesn't contain any information about θ. Therefore, given a photon detection at time t_2 the output state on channel one (C1) is thus

$$|\Phi\rangle^{\text{C1}} = \sqrt{\frac{1}{t_2}} \int_0^{t_2} e^{-i\theta t_1} |t_1\rangle \, \mathrm{d}t_1.$$

We now see that a frequency measurement on C1 enables one to achieve the T^2 scaling. To see this we calculate the CFI for this measurement. Since the probability density function (pdf) for detection at frequency ω is given by

$$p(\omega) = \frac{1}{2\pi t_2} \left[\frac{1 - \cos((\omega - \theta)t_2)}{(\omega - \theta)^2} \right].$$

it follows (by using (4.2)) that the CFI is given by

$$I^{\text{C1}}(\theta|t_2) = \frac{t_2^2}{6}.$$

Finally, to obtain the full Fisher Information for the measurement we must average over all detection times in C2, corresponding to the photon measurement there, and

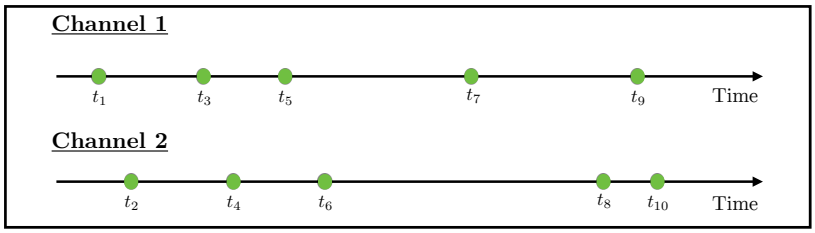

FIGURE 8.6: Timeline of photon detections is two output channels for example in Sec. 8.2.7.

then weight the total with the probability of obtaining two photons. Hence

$$I^{\mathrm{C1}}(\theta) = \frac{e^{-1}T_{\mathrm{tot}}^2}{36}.$$

On the other hand it turns out that $F^{\mathrm{C1}}(\theta) = \frac{e^{-1}T_{\mathrm{tot}}^2}{9}$, so this measurement is only a factor of 4 worse than the optimal one under the assumptions here. Moreover, much of the information in the field is contained in the first photon, which is evidenced by the fact that $F^{\mathrm{C1}}(\theta)/F^{\mathrm{even}}(\theta) \approx 31\%$. Therefore, our measurement choice here seems to be very good and so there is not much to be gained from measuring the other photons[5].

It was also shown in [115] that at a first-order DPT the QFI of a general non-linear system become quadratic in time. However, in that context it remains an open problem how to exploit the large QFI scaling (i.e find a physical measurement).

8.2.8 Noise

We briefly discuss an example, which attempts to understand how noise affects the theory in this chapter.

Consider the quantum cavity from example 9, where there is one accessible channel and one noise channel (see Sec. 5.5). Suppose that we are to estimate Ω from the accessible channel.

Suppose that, as above, we use a monochromatic coherent input state with time dependent amplitude $\alpha(t) = \alpha e^{i\omega t}$ (i.e a frequency ω coherent state of amplitude

[5]However, it is possible to compute the CFI for this case because there is a simplification where for a given number of emissions the distribution of each photon is iid. We don't do this here though.

$\alpha\sqrt{T_{\text{tot}}}$). Then provided that $T_{\text{tot}} \gg (|c_1|^2 + |c_2|^2)$ the output will be a coherent state of frequency ω and amplitude

$$\left(1 - \frac{|c_1|^2}{-i\omega + i\Omega + \frac{1}{2}\left(|c_1|^2 + |c_2|^2\right)}\right)\alpha\sqrt{T_{\text{tot}}}.$$

Now, we can use the result of Appendix K to calculate the QFI:

$$F(\Omega) = E\frac{|c|^4}{\left((\omega - \Omega)^2 + \frac{1}{4}(|c|_1^2 + |c_2|^2)^2\right)^2},$$

where E is the energy of the input given by $E = |\alpha|^2 T_{\text{tot}}$. Notice the similarities with the expression for the noiseless case in Eq. 8.2. Therefore, the results in this noiseless case are valid so long as c_2 is not too big (i.e so that $T_{\text{tot}} \gg (|c_1|^2 + |c_2|^2)$) so that the system is able to stabilise. It is expected that this conclusion will be true for arbitrary noisy PQLSs too. Therefore the difficulty will be in designing a feedback method to reduce the coupling in the noisy channel without having access to it, which would probably need further assumptions on the accessibility of this channel.

An interesting question to consider is in what circumstances it is possible for noisy PQLS (or more generally QLSs) to achieve Heisenberg scaling. From the above it seems that in order to get Heisenberg scaling we would need a spectral gap of order $\mathcal{O}\left(T_{\text{tot}}^{-1}\right)$. This might be true only if the system can be separated as two subsystems, such that one is coupled with the accessible channel and the second with the noise channel. Then the noisy channel would not affect the dynamics of the first subsystem and we can estimate parameters within to Heisenberg level. On the other hand, perhaps Heisenberg scaling is possible for a more general class of QLS, such as those with noise unobservable subspaces (see Sec. 5.5.2)?

8.3 Feedback Method for QLSs; Stationary Approach

Decoherence-free subsystems are also advantageous for estimation in the stationary approach. We shall study this here for SISO PQLSs (we revisit this in the following chapter for general SISO QLSs). Assume, by the feedback methods in Sec. 8.2 or

otherwise, that we have a SISO PQLS with (at least) one eigenvalue that is $\mathcal{O}(\tau^{-1})$ from the imaginary axis, where $\tau = T_{\text{tot}}^{1-\epsilon}$ with T_{tot} large enough so that the system has reached stationarity.

8.3.1 QFI Scaling

Let us show that there is an enhancement in the QFI in terms of time resources, T_{tot}, in the stationary approach. Recall that the input to our system is a series of iid Gaussian stationary quantum noise field processes characterised by the covariance, $V(N, M)$ (see Eq. (3.21)). Therefore, the output will also be series of Gaussian stationary quantum noise field processes with mean zero and covariance $\mathbb{E}\left[\breve{\mathbf{b}}_{\text{out}}(t)\breve{\mathbf{b}}_{\text{out}}^{\dagger}(s)\right] = V_\theta(t, s)$.

To calculate the QFI it is simpler to work in the frequency domain because all frequency modes are independent and therefore the action of the system is a series of rotations on the squeezed input states. The QFI **per unit time** from frequency ω is (see Sec. 6.11.4)

$$\begin{aligned} f_\theta(\omega) &= -\text{Tr}\left(J\dot{\Psi}(\omega)J\dot{\Psi}(\omega)\right) \\ &= |M|^2 \left|\frac{d\Xi(-i\omega)\Xi(+i\omega)}{d\theta}\right|^2 \end{aligned} \tag{8.28}$$

assuming $T_{\text{tot}} >> \tau$. By writing the transfer function in terms of its poles as in Eq. (8.8) where $-\text{Re}(z_1) = \mathcal{O}(\tau^{-1})$, it follows that

$$\frac{d\Xi(-i\omega)}{d\theta} = \begin{cases} \mathcal{O}(\tau) & \text{if } |\omega - \text{Im}(z_1)| \sim \frac{1}{\tau} \\ \mathcal{O}\left(\frac{1}{\tau(\omega - \text{Im}(z_1))^2}\right) & \text{otherwise} \end{cases} \tag{8.29}$$

Now the QFI per unit time is obtained by integrating (8.28) over ω. Using (8.29) it follows that that the only significant contributions to the integral come from the intervals $|\omega - \text{Im}(z_1)| \sim \frac{1}{\tau}$ and $|\omega + \text{Im}(z_1)| \sim \frac{1}{\tau}$. Therefore $f_\theta \propto \tau^2 \times \frac{1}{\tau} = \tau$ (see Fig. 8.7). Hence the QFI scales as $\mathcal{O}(T_{\text{tot}}\tau)$. This suggests that DFSs are advantageous in the stationary regime too. Note that unlike the time-domain approach (Sec. 8.2), no adaptive strategy is necessary.

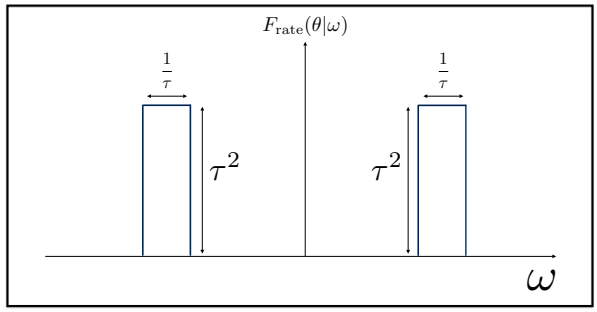

FIGURE 8.7: There are two frequency bands contributing to the QFI.

Example 20. *Let us calculate the QFI explicitly for estimating Ω in the cavity example from Sec. 8.1.2. The spectral gap is given by $|c|^2$. As*

$$\frac{d\Xi(-i\omega)}{d\Omega} = \frac{i|c|^2}{i(\Omega-\omega)+\frac{1}{2}|c|^2},$$

then

$$\begin{aligned} f_\Omega(\omega) &= |M|^2|c|^4\left(\frac{1}{\left((\Omega-\omega)^2+\frac{1}{4}|c|^4\right)^2}+\frac{1}{\left((\Omega+\omega)^2+\frac{1}{4}|c|^4\right)^2}\right. \\ &\quad \left. + 2\frac{1}{(\Omega-\omega)^2+\frac{1}{4}|c|^4}\frac{1}{(\Omega+\omega)^2+\frac{1}{4}|c|^4}\right) \\ &\geq |M|^2|c|^4\left(\frac{1}{\left((\Omega-\omega)^2+\frac{1}{4}|c|^4\right)^2}+\frac{1}{\left((\Omega+\omega)^2+\frac{1}{4}|c|^4\right)^2}\right). \end{aligned}$$

Therefore, by using Eq. (6.44),

$$f_\Omega \geq \frac{1}{\pi}\int_{-\infty}^{\infty}|M|^2|c|^4\frac{1}{\left(\omega^2+\frac{1}{4}|c|^4\right)^2}d\omega.$$

Finally, using the substitution $\omega = \frac{1}{2}\tan(\theta)$, or otherwise, one obtains $f_\Omega \geq \frac{4|M|^2}{|c|^2} = 4|M|^2\tau$.

The next step is to find a measurement enabling this heightened scaling. We shall return to this problem in the following chapter with the help of *coherent quantum absorbers*.

8.4 Conclusion

In this chapter we have seen that when the system is almost dynamically unstable, i.e., the poles of the transfer function are close to the imaginary axis the sensitivity is increased to a quadratic scaling with time if the total time is of the order of the correlation time. We gave two feedback schemes designed to exploit this enhancement. The common theme in both of these was that the poles of the transfer function were driven to the imaginary axis. The first feedback scheme used a beam-splitter with a large reflectivity to weaken the coupling of the field to the system. The second method used a coherent feedback scheme and an addition of a second (set of) control channel(s) connected in a feedback loop. We explained that the meaning of adding a second control channel was to add a set of reflective mirrors in the cavity that one is able to control. In all honesty this second scheme could potentially still be very challenging experimentally, as it would require some access to the system. Nevertheless it is still interesting mathematically.

In the regime of time-dependent inputs we developed an adaptive procedure to realise the T^2 level of scaling. The key step was that the frequency of the input is chosen as an estimator from the previous step and one mode (or the entire system) is destabilised step by step. Note that we worked with coherent states here, hence the scaling with with energy is linear. It is expected that all results could be enhanced by a further factor of E, for example by using squeezed-coherent states, provided that a suitable measurement and estimator exists achieving the scaling.

We also considered the case of stationary inputs and showed that the same enhancement was possible.

8.5 Outlook

There are various directions to extend this work. Firstly, preliminary investigations indicate that these methods would also work for multiple parameters by isolating more modes in the feedback method in Sec. 8.2.3. Another direction is to the problem from Sec. 8.2 for the case of time-dependent inputs to active QLSs. It is our

expectation that the ideas would transfer over directly. It would be an interesting problem for the experimental community to confirm the ideas here, i.e., that Heisenberg scaling is obtainable in practice from an experiment.

It remains an open problem to investigate the general parameter estimation problem (i.e. beyond this quasi-DFS setup) in the stationary inputs approach. That is, what are the optimal inputs and measurements to use with either time or energy (or both) as a resource for quantum metrology. This problem would be particularly interesting in the MIMO case.

Chapter 9

Quantum Absorbers

Environment (or reservoir) engineering has increased in popularity in recent years [26, 55–57]. This innovative technique is a way of designing a system's master equation in order to drive the system into a desired pure stationary state using dissipative field dynamics [58] or performing continuous measurement on the field. It has prominent applications in laser cooling or optical pumping. This topic has also been studied in QLS theory. Specifically in [26] necessary and sufficient conditions were given for a general QLS to have a unique pure steady state. This leads to a dissipative procedure enabling one to engineer an arbitrary pure gaussian state.

In this work we consider the following environment engineering problem: given a QLS our goal is to design a second QLS, called the *dual system* so that radiation emission from the QLS is coherently reabsorbed by the dual. That is, the dual system acts as a coherent quantum absorber for the first. In other words the stationary state of the combined system is pure and therefore the output is equal to the input. We shall use the terms *dual* and *quantum absorber* synonymously in the following. We show here that for a stable QLS it is always possible to find a stable QLS coherent absorber. One reason why this setup is so interesting is because it provides a natural purification of the stationary state. Purifications with the use of larger Hilbert spaces have found widespread use in quantum information theory, as generally they are much easier to work with than mixed states [3]. Obtaining a purification is well-known to be a hard problem and was the main reason prompting the study of the parallel problem to ours for non-linear quantum systems [56]. In particular it was shown there that such a quantum absorber always exists for SISO non-linear systems.

In Sec. 9.1 we solve the environment engineering problem for general (MIMO as well as SISO) QLSs. A corollary of our work is given in Sec. 9.2, which enables the proof of Theorem 15, as promised in Ch. 6.8.2.

Finally, we discuss an application of quantum absorbers to quantum estimation, and in particular how to devise optimal measurements and estimators for the Heisenberg level stationary input setup from Sec. 8.3. We begin by revisiting the QFI calculation from Sec. 8.3.1, which demonstrated the scaling enhancement when the system destabilises. We recalculate the QFI in the time domain, which simplifies considerably with the help of the dual absorber system. The essential point is that the useful information about the system is contained only within output correlations between times t and s such that $|t-s| < \tau$, where τ is the inverse of the spectral gap. We then consider a homodyne measurement on the output. We recognise that in post-processing the measurement it is useful to devise estimators placing weight only on these correlation lengths. For example, total integrated current is not very useful as the noise and signal contribution will be comparable. That is, although the mean of the estimator will be large, so will the variance and therefore all information about the signal is lost. Using such clever weighted estimators overcomes this problem and ensures that the variance is not be too large while the mean can still be large (see Sec. 9.3.2). Our estimator has a simple interpretation when viewed in the frequency domain as a frequency band-limited measurement. Lastly, we consider whether it is possible to devise an optimal strategy realising the QFI in the simpler case of a PQLS. That is, we would like to improve the constant in front of the τT_{tot} level of scaling. It is for this problem that the use of quantum absorbers become particularly useful. Generally in a PQLS the action of the system in the frequency domain is to rotate the squeezed input by an angle which depends on the unknown parameter. Therefore in general each frequency will rotate by a different phase. This is potentially problematic because the optimal quadrature to measure in each frequency is different. Our trick to overcome this and obtain optimality is to proceed adaptively by first obtaining a rough estimate of the system (with suboptimal scaling) and then use a quantum absorber. The effect of the absorber is to make all of the rotations in the frequency domain very small. The upshot is that the best quadrature to measure will be the same for all frequencies. This quadrature is the best measurement and

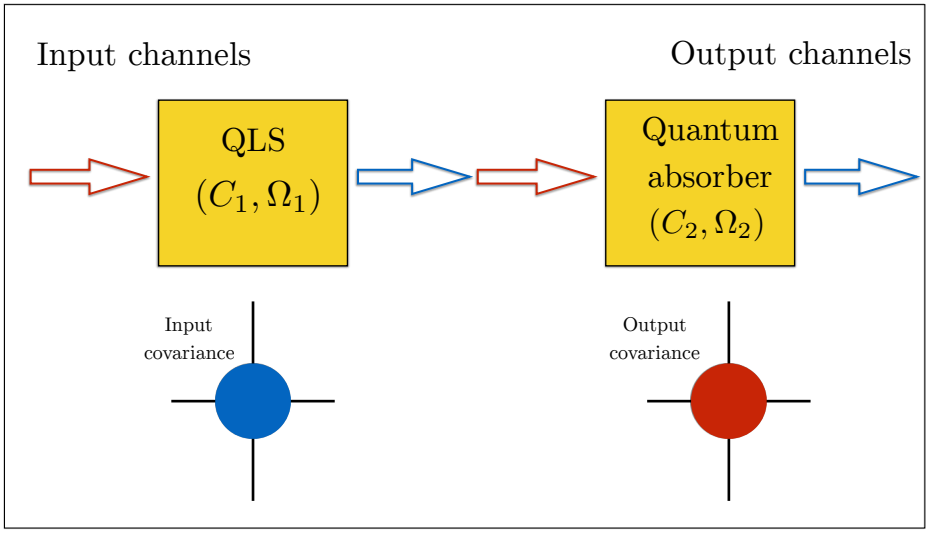

FIGURE 9.1: QLS (C_2, A_2) is a quantum absorber for QLS (C_1, A_1). The input and output states are identical

realises the optimal QFI scaling following the results in [120].

We discuss other potential applications of quantum absorbers in Sec. 9.4.

9.1 Finding the Dual System

Consider a globally minimal QLS characterised by (C_1, A_1) for vacuum input, V_{vac}. Our goal is to find a second system (C_2, A_2) such that the combined system resulting from connecting them in series (see Sec. 3.9) has trivial power spectrum, i.e., $\Psi(s) = V_{\text{vac}}$. Label the system modes of the first system as $\breve{\mathbf{a}}_1$ and the modes of the second system by $\breve{\mathbf{a}}_2$ (see Fig. 9.1).

The combined system may be represented by[1]

$$(C_{\text{series}}, A_{\text{series}}) := \left((C_1, C_2), \begin{pmatrix} A_1 & 0 \\ -C_2^\flat C_1 & A_2 \end{pmatrix} \right).$$

[1] In this representation the modes are ordered as $\left[\begin{smallmatrix} \breve{\mathbf{a}}_1 \\ \breve{\mathbf{a}}_2 \end{smallmatrix}\right]$, rather than the doubled-up form $\breve{\mathbf{a}}$ where $\mathbf{a} = \left[\begin{smallmatrix} \mathbf{a}_1 \\ \mathbf{a}_2 \end{smallmatrix}\right]$.

Let us change basis on our system (C_1, A_1) by applying a symplectic transformation so that its (reduced) stationary state, P, is given by

$$\left\langle \breve{\mathbf{a}}_1 \breve{\mathbf{a}}_1^\dagger \right\rangle := \begin{pmatrix} \mathrm{Diag}(N_1+1,\ldots,N_n+1) & 0 \\ 0 & \mathrm{Diag}(N_1,\ldots,N_n) \end{pmatrix}$$

(recall that P is the solution of the Lyapunov equation for the first system). That is, all modes are independent of each other and are thermal states (see Sec. 3.1). Note that $N_i \neq 0$ for all i by global minimality (see Theorem 8). Such a transformation will alter the matrices (C_1, A_1), but we still denote them (C_1, A_1) so to not convolute the notation.

Now the requirement that $(C_{\text{series}}, A_{\text{series}})$ has a trivial power spectrum is equivalent to that its stationary state be pure (Theorem 8). In light of this, we consider the pure extension of P onto the modes $\breve{\mathbf{a}}_2$ given by

$$\left\langle \begin{pmatrix} \breve{\mathbf{a}}_1 \\ \breve{\mathbf{a}}_2 \end{pmatrix} \begin{pmatrix} \breve{\mathbf{a}}_1^\dagger & \breve{\mathbf{a}}_2^\dagger \end{pmatrix} \right\rangle := \begin{pmatrix} P & Q \\ Q & P \end{pmatrix},$$

where

$$P = \begin{pmatrix} \mathrm{Diag}(N_1+1,\ldots,N_n+1) & 0 \\ 0 & \mathrm{Diag}(N_1,\ldots,N_n) \end{pmatrix} := \begin{pmatrix} N+1 & 0 \\ 0 & N \end{pmatrix},$$

$$Q = \begin{pmatrix} 0 & \mathrm{Diag}(M_1,\ldots,M_n) \\ \mathrm{Diag}(M_1,\ldots,M_n) & 0 \end{pmatrix} := \begin{pmatrix} 0 & M \\ M & 0 \end{pmatrix}$$

with $N_i, M_i \in \mathbb{R}$, $N_i(N_i+1) = M_i^2$ (or equivalently P, Q are real matrices satisfying $P = QP^{-1}Q$). That is, we have a product of two-mode squeezed states, as in Theorem 4, so that entanglement is localised to one mode at each site. The solution to our problem (should one exist) is therefore given by the matrices (C_2, A_2) satisfying the Lyapunov equation

$$\begin{pmatrix} A_1 & 0 \\ -C_2^\flat C_1 & A_2 \end{pmatrix} \begin{pmatrix} P & Q \\ Q & P \end{pmatrix} + \begin{pmatrix} P & Q \\ Q & P \end{pmatrix} \begin{pmatrix} A_1^\dagger & -\left(C_2^\flat C_1\right)^\dagger \\ 0 & A_2^\dagger \end{pmatrix} + \begin{pmatrix} C_1^\flat V_{\text{vac}} \left(C_1^\flat\right)^\dagger & C_1^\flat V_{\text{vac}} \left(C_2^\flat\right)^\dagger \\ C_2^\flat V_{\text{vac}} \left(C_1^\flat\right)^\dagger & C_2^\flat V_{\text{vac}} \left(C_2^\flat\right)^\dagger \end{pmatrix} = 0. \quad (9.1)$$

Equation (9.1) leads to the following three equations:

$$A_1 P + P A_1^\dagger + C_1^\flat V_{\text{vac}} \left(C_1^\flat\right)^\dagger = 0 \tag{9.2}$$

$$A_1 Q + Q A_2^\dagger - P \left(C_2^\flat C_1\right)^\dagger + C_1^\flat V_{\text{vac}} \left(C_2^\flat\right)^\dagger = 0 \tag{9.3}$$

$$A_2 P + P A_2^\dagger - C_2^\flat C_1 Q - Q \left(C_2^\flat C_1\right)^\dagger + C_2^\flat V_{\text{vac}} \left(C_2^\flat\right)^\dagger = 0. \tag{9.4}$$

Now, rearranging (9.3) and substituting this into (9.4) gives

$$\begin{aligned} &- C_2^\flat V_{\text{vac}} \left(C_1^\flat\right)^\dagger Q^{-1} P + C_2^\flat C_1 P Q P^{-1} - Q A_1^\dagger Q^{-1} P - P Q^{-1} C_1^\flat V_{\text{vac}} \left(C_2^\flat\right)^\dagger \\ &+ P Q^{-1} P \left(C_2^\flat C_1\right)^\dagger - P Q^{-1} A_1 Q - C_2^\flat C_1 Q - Q \left(C_2^\flat C_1\right)^\dagger + C_2^\flat V_{\text{vac}} \left(C_2^\flat\right)^\dagger = 0. \end{aligned}$$

Using the condition $P = QP^{-1}Q$ leads to cancellations of terms 2, 5, 7 and 8 in this equation, thus

$$-C_2^\flat V_{\text{vac}} \left(C_1^\flat\right)^\dagger Q^{-1} P - Q A_1^\dagger Q^{-1} P - P Q^{-1} C_1^\flat V_{\text{vac}} \left(C_2^\flat\right)^\dagger - P Q^{-1} A_1 Q + C_2^\flat V_{\text{vac}} \left(C_2^\flat\right)^\dagger = 0 \tag{9.5}$$

Finally, we can use $P = QP^{-1}Q$ and Eq. (9.2) on the second and fourth terms in this expression to obtain

$$\left(P Q^{-1} C_1^\flat - C_2^\flat\right) V_{\text{vac}} \left(P Q^{-1} C_1^\flat - C_2^\flat\right)^\dagger = 0, \tag{9.6}$$

hence

$$C_2^\flat V_{\text{vac}} = P Q^{-1} C_1^\flat V_{\text{vac}}. \tag{9.7}$$

Because V_{vac} is not invertible, then it may appear that C_2 in (9.7) is not unique. However, upon closer inspection and in particular using $V_{\text{vac}} = \left(\begin{smallmatrix} 1 & 0 \\ 0 & 0 \end{smallmatrix}\right)$ allows one to recover C_{2-} and C_{2+} uniquely and, hence from this (using the doubled-up property), C_2. Furthermore, we can combine this solution with (9.2) and (9.3) to obtain an expression for A_2 in terms of C_1, A_1, P and Q. That is,

$$A_2 = Q P^{-1} A_1 P Q^{-1} + C_2^\flat C_1 P Q^{-1}, \tag{9.8}$$

where C_2 is implicitly a function of C_1, A_1, P and Q.

Remark 15. *Our dual system, (C_2, A_2), is unique up to the symplectic equivalence in Theorem 5). This follows because the solution Eqs. (9.7) and (9.8) was unique in the particular basis we chose (i.e. the one with the diagonal structure in the matrices P and Q for the stationary state)*

Now, at this stage it is not clear whether our solution, (C_2, A_2), is (i) physically realisable and (ii) stable.

Firstly, let us show that (C_2, A_2) is physically realisable. There are two conditions that must hold for this to be the case (see Sec. 3.3):

(a) the matrices are doubled-up

(b) the matrices satisfy (3.15) from Sec. 3.3.

We can ensure that C_2 is doubled-up by construction from (9.7). Let us see that A_2 is also doubled-up. Begin by writing A_2 in block form as $A_2 = \begin{pmatrix} A_2^{(11)} & A_2^{(12)} \\ A_2^{(21)} & A_2^{(22)} \end{pmatrix}$. Therefore, we require that $A_2^{(11)} = \overline{A_2^{(22)}}$ and $A_2^{(12)} = \overline{A_2^{(21)}}$; we verify the first of these here (the proof of the second is similar). Using (9.7) and (9.8) $A_2^{(11)} = \overline{A_2^{(22)}}$ is equivalent to the following requirement:

$$M(N+1)^{-1}A_{1-}(N+1)M^{-1} + NM^{-1}C_{1-}^{\dagger}C_{1-}(N+1)M^{-1} - (N+1)^{-1}M^{-1}C_{1+}^{T}\overline{C}_{1+}(N+1)M^{-1}$$
$$= MN^{-1}A_{1-}NM^{-1} + NM^{-1}C_{1-}^{\dagger}C_{1-}NM^{-1} - (N+1)^{-1}M^{-1}C_{1+}^{T}\overline{C}_{1+}NM^{-1}$$

Now multiplying this expression by M on both sides and using the property $N(N+1) = M^2$ and the fact that N and M commute since they are diagonal matrices gives:

$$A_{1-}N = NA_{1-} + NC_{1-}^{\dagger}C_{1-} - (1+N)C_{1+}^{T}\overline{C}_{1+}$$

(after some manipulation). Hence we require that

$$A_{1-}N - N(A_{1-} + C_{1-}^{\dagger}C_{1-} - C_{1+}^{T}\overline{C}_{1+}) + C_{1+}^{T}\overline{C}_{1+} = 0.$$

This can be seen to be true by using the physical realisably of (C_1, A_1) (in particular that that $A_{1-} + A_{1-}^{\dagger}C_{1-}^{\dagger}C_{1-} - C_{1+}^{T}\overline{C}_{1+} = 0$) and condition (9.2), hence we are done.

Finally, we prove condition (b) in order to complete the physical realisability proof. Condition (b) is equivalent to

$$A_2^{(11)} + A_2^{(11)\dagger} + C_{2-}^\dagger C_{2-} - C_{2+}^T \overline{C}_{2+} = 0 \tag{9.9}$$

$$A_2^{(12)} + A_2^{(12)T} + C_{2-}^\dagger C_{2+} - C_{2+}^T \overline{C}_{2-} = 0. \tag{9.10}$$

We show here that Eq. (9.9) is true (Eq. (9.10) is similar). Using (9.7) and (9.8) it follows that (9.9) is equivalent to

$$N^{-1}MA_{1-}M^{-1}N + NM^{-1}A_{1-}^\dagger MN^{-1} + M^{-1}C_{1+}^T\overline{C}_{1+}M^{-1} + NM^{-1}(C_{1-}^\dagger C_{1-} - C_{1+}^T\overline{C}_{1+})M^{-1}N = 0.$$

Multiplying this equation by M on both sides, we obtain the following equivalent expression

$$N(A_{1-} + A_{1-}^\dagger + C_{1-}^\dagger C_{1-} - C_{1+}^T\overline{C}_{1+})N + A_{1-}N + NA_{1-}^\dagger + C_{1+}^T\overline{C}_{1+} = 0.$$

This is true by (9.2) and the physical realisability of the first system.

To see that the system (C_2, A_2) is stable observe that A_2 can be shown to satisfy the following:

$$A_2 = QP^{-1}\left(\begin{smallmatrix} N & 0 \\ 0 & -(N+1) \end{smallmatrix}\right) A_1 \left(\begin{smallmatrix} N^{-1} & 0 \\ 0 & -(N+1)^{-1} \end{smallmatrix}\right) PQ^{-1}.$$

Therefore the eigenvalues of A_2 are the same as those of A_1, hence the system must be stable.

Let us see the specific case of a one mode system (with a one mode dual system), where the solution simplifies considerably. Firstly, from the Lyapunov equation (9.2) we obtain the conditions:

$$N_1 = \frac{C_{1+}^\dagger C_{1+}}{C_{1-}^\dagger C_{1-} - C_{1+}^\dagger C_{1+}} = \frac{-A_1 - C_1^\dagger C_1}{2A_+}. \tag{9.11}$$

Note that this is not an over-constrained system of equations, instead they are a necessary condition of our particular choice of basis. As $M_1 = \sqrt{N(N+1)}$ and

using (9.7), (9.8) and (9.11) it follows (after some careful algebra) that

$$C_{2-} = -\sqrt{\frac{C_{1-}^{\dagger}C_{1-}}{C_{1+}^{\dagger}C_{1+}}}C_{1,+}, \quad C_{2+} = -\sqrt{\frac{C_{1+}^{\dagger}C_{1+}}{C_{1-}^{\dagger}C_{1-}}}C_{1,-} \quad \text{and} \quad A_2 = \Delta\left(\overline{A}_{1-}, -\overline{A}_{1+}\right).$$

Equivalently, $A_2 = J\overline{A_1}J$. It is straightforward to check that this system is physical (i.e satisfies PR conditions (3.15)) and is stable (the eigenvalues of A_1 and A_2 coincide).

Example 21. *We will now find the dual system for the following two-mode QLS:*

$$C = \begin{pmatrix} 5 & 4 & 1 & -i \\ 1 & i & 5 & 4 \end{pmatrix} \quad A = \begin{pmatrix} -12-2i & 0.5i & 1 & -2-2.5i \\ -20-0.5i & -7.5-6i & -6-7.5i & -2i \\ 1 & -2+2.5i & -12+2i & -0.5i \\ -6+7.5i & 2i & -20+0.5i & -7.5+6i \end{pmatrix}.$$

The two-mode stationary state of this system has covariance matrix (given by the solution to the Lyapunov equation (6.1)):

$$P = \begin{pmatrix} 1.1067 & -0.0799-0.1952i & -0.1680+0.0636i & -0.3262-0.1575i \\ -0.0799+0.1952i & 1.7835 & -0.3262-0.1575i & 0.8234-0.3690i \\ -0.1680-0.0636i & -0.3262+0.1575i & 0.1067 & -0.0799+0.1952i \\ -0.3262+0.1575i & 0.8234+0.3690i & -0.0799-0.1952i & 0.7835 \end{pmatrix}.$$

Now, performing the change of basis

$$C \mapsto CS^{\flat} \quad A \mapsto SAS^{\flat} \quad P \mapsto SPS^{\dagger},$$

where the symplectic S is given by

$$S = \begin{pmatrix} 1.0132+0.0018i & -0.0325-0.2069i & -0.1418-0.0134i & -0.2018-0.0969i \\ -0.0060-0.1457i & 1.1105+0.0013i & -0.1657-0.0058i & 0.4286-0.2080i \\ 0.1418+0.0134i & -0.2018+0.0969 & 1.0132-0.0018i & -0.0325+0.2069i \\ -0.1657+0.0058i & 0.4286+0.2080i & -0.0060+0.1457i & 1.1105-0.0013i \end{pmatrix},$$

we obtain the TFE system characterised by (C_1, A_1), where

$$C_1 = \begin{pmatrix} 4.9055-0.3949i & 4.2841-1.3610i & -0.2132-0.0847i & 0.6671-2.2200i \\ -0.2132+0.0847i & 0.6671+2.2200i & 4.9055+0.3949i & 4.2841+1.3610i \end{pmatrix}$$

$$A_1 = \begin{pmatrix} -12.0838-3.5321i & 0.0117+1.4452i & -1.0080-0.4978i & -0.5957-0.4592i \\ -21.5223-3.0091i & -7.4162-3.4138i & 4.4199-10.4105i & 3.4092-4.9884i \\ -1.0080+0.4978i & -0.5957+0.4592i & -12.0838+3.5321i & 0.0117-1.4452i \\ 4.4199+10.4105i & 3.4092+4.9884i & -21.5223+3.0091i & -7.4162+3.4138i \end{pmatrix}.$$

Importantly the two modes of (C_1, A_1) are independent at stationarity and have covariance matrix given by $P = \mathrm{Diag}\,(1.3623, 1.0022, 0.3623, 0.0022)$.

We can now find the dual directly using Eqs. (9.7) and (9.8). Specifically, the dual is characterised by

$$C_2 = \begin{pmatrix} 4.5733+1.8180i & -1.2936+4.3049i & -0.2287+0.0184i & -2.2092+0.7018i \\ -0.2287-0.0184i & -2.2092-0.7018i & 4.5733-1.8180i & -1.2936-4.3049i \end{pmatrix}$$

$$A_2 = \begin{pmatrix} -12.0838+3.5322i & 0.0412-21.7310i & 1.0074-0.4989i & 8.9136-6.9596i \\ -1.4331+0.1886i & -7.4163+3.3866i & -0.2533-0.6494i & -3.3657-5.0183i \\ 1.0074+0.4989i & 8.9136+6.9596i & -12.0838-3.5322i & 0.0412+21.7310i \\ -0.2533+0.6494i & -3.3657+5.0183i & -1.4331-0.1886i & -7.4163-3.3866i \end{pmatrix}.$$

One can indeed verify that the dual system (C_2, A_2) is both stable (i.e. the eigenvalues of A_2 have negative real part) and physical (it satisfies Eq. (3.15)).

9.2 Reducibility of the Power Spectrum

We now digress and use some of the results that we have just found in order to develop a result that enables us to prove Theorem 15 earlier.

Theorem 20. *Consider an n-mode cascaded QLS, $\mathcal{G}$, with vacuum input that has a pure stationary state. Also suppose that $\mathcal{G}$ is a cascade of two QLSs, $\mathcal{G} = (C_2, A_2) \triangleleft (C_1, A_1)$, where:*

- *the QLS (C_1, A_1) has one mode and is globally minimal.*
- *the QLS (C_2, A_2) has $n-1$ modes.*

Then there exists a TFE QLS to (C_2, A_2) given by $(C'_2, A'_2) = (C'_{2_2}, A'_{2_2}) \triangleleft (C'_{2_1}, A'_{2_1})$ such that $(C'_{2_1}, A'_{2_1}) \triangleleft (C_1, A_1)$ has a pure stationary state (hence trivial power spectrum), where

- *the QLS (C'_{2_1}, A'_{2_1}) has one mode and is globally minimal and*
- *the QLS (C'_{2_2}, A'_{2_2}) has $n-2$ modes.*

The upshot is that the modes in the power spectrum are reducible in pairs.

Remark 16. *Note that we have chosen to impose the requirement that (C_1, A_1) be globally minimal, otherwise if it were not, then the mode would be reducible. Therefore this assumption is necessary to rule out the trivial case.*

Proof. First, using Theorem 4 and considering a bipartition of modes between the systems (C_1, A_1) and (C_2, A_2) there exists TFE systems (C_1', A_1') and (C_2', A_2') with combined stationary state

$$\left\langle \begin{pmatrix} \breve{\mathbf{a}}_1 \\ \breve{\mathbf{a}}_{2_1} \\ \breve{\mathbf{a}}_{2_2} \end{pmatrix} \begin{pmatrix} \breve{\mathbf{a}}_1^\dagger & \breve{\mathbf{a}}_{2_1}^\dagger & \breve{\mathbf{a}}_{2_2}^\dagger \end{pmatrix} \right\rangle := \begin{pmatrix} P & Q & 0 \\ Q & P & 0 \\ 0 & 0 & V \end{pmatrix},$$

where

$$P = \begin{pmatrix} N+1 & 0 \\ 0 & N \end{pmatrix} \quad Q = \begin{pmatrix} 0 & M \\ M & 0 \end{pmatrix}$$

with $N, M \in \mathbb{R}$ such that $P = QP^{-1}Q$. That is, the mode belonging to (C_1', A_1') and one mode of (C_2', A_2') have an entangled pure stationary state. The matrix V here is of size $2(n-2) \times 2(n-2)$ and is the (pure) covariance matrix of the modes $\breve{\mathbf{a}}_{2_2}$.

Now write the matrices (C_2', A_2') as

$$\left((C_{2_1}', C_{2_2}'), \begin{pmatrix} A_{2_1}' & A_{2_{12}}' \\ A_{2_{21}}' & A_{2_2}' \end{pmatrix} \right).$$

Note that the modes are ordered as $\begin{bmatrix} \breve{\mathrm{a}}_1 \\ \breve{\mathrm{a}}_{2_1} \\ \breve{\mathrm{a}}_{2_2} \end{bmatrix}$ in this representation.

Now, using the usual Lyapunov equation (6.1) for the stationary state, and by writing it as a 3×3 block matrix equation with respect to the modes $\begin{bmatrix} \breve{\mathrm{a}}_1 \\ \breve{\mathrm{a}}_{2_1} \\ \breve{\mathrm{a}}_{2_2} \end{bmatrix}$, it follows that the $(1,1)$, $(1,2)$, $(2,1)$ and $(2,2)$ reduce to the Eq. (9.1) in Sec. 9.1, hence (C_{2_1}', A_{2_1}') are given by Eqs. (9.7) and (9.8); we will use this fact shortly.

It remains to show that $A_{2_{12}} = 0$ and $A_{2_{21}} = -C_{2_2}'^{\flat} C_{2_2}'$, for then this would imply that the system (C_2', A_2') is a cascade of the QLSs (C_{2_1}', A_{2_1}') and (C_{2_2}', A_{2_2}') (see Eq. (2.9)). To see this, begin by observing that the $(1,3)$ and $(2,3)$ block entries of the Lyapunov equation lead to the equations

$$A_{2_{21}}' P + V A_{2_{12}}'^{\dagger} - C_{2_2}'^{\flat} C_1' Q + C_{2_2}'^{\flat} V_{\mathrm{Vac}} \left(C_{2_1}'^{\flat} \right)^{\dagger} = 0 \tag{9.12}$$

$$A_{2_{21}}' Q - C_{2_2}'^{\flat} C_1' P + C_{2_2}'^{\flat} V_{\mathrm{Vac}} \left(C_1'^{\flat} \right)^{\dagger} = 0. \tag{9.13}$$

Now multiplying Eq. (9.13) by $Q^{-1}P$ and using (9.7) and the condition $P = QP^{-1}Q$ gives

$$A'_{2_{21}}P - C'^{\flat}_{2_2}C'_1Q + C'^{\flat}_{2_2}V_{\text{Vac}}\left(C'^{\flat}_{2_1}\right)^{\dagger} = 0.$$

Finally, subtracting this equation from (9.12) gives $A_{2_{12}} = 0$, as required. Finally, the condition $A_{2_{21}} = -C'^{\flat}_{2_2}C'_{2_2}$ follows from the PR conditions (3.15). □

The interpretation of the theorem is that the system, (C'_{2_1}, A'_{2_1}) is absorbing the energy emitted by the system, (C_1, A_1); or more precisely the overall effect of (C_1, A_1) is nullified by (C'_{2_1}, A'_{2_1}), which is analogous to destructive interference.

9.3 Application 1: Estimation

Quantum absorbers offer interesting opportunities for quantum estimation within QLSs. In this subsection we discuss one instance of this. Suppose that there are a set of unknown parameter(s), θ, that we would to estimate within a QLS. By using a dual system at parameter θ_0 (representing prior knowledge of the system) enables one to focus on a much smaller neighbourhood of the unknown parameter space. Essentially the dual system now constitutes part of the measurement and increases the available class of realistic measurements (see Fig 9.2). Even in the standard metrology setup (see Sec. 4.2) adaptive measurement procedures using some of the available resources to obtain rough guesses for the parameter(s) are necessary [108] because the optimal measurement choice itself may depend on the unknown parameter(s); for example the optimal quadrature to measure in a homodyne measurement.

Consider the setup in Sec. 8.3 where we have a SISO QLS (note that in particular we are going beyond the class of passive systems in Sec. 8.3) with (at least) one eigenvalue that is $\mathcal{O}(\tau^{-1})$ from the imaginary axis, where $\tau = T_{\text{tot}}^{1-\epsilon}$ and T_{tot} is large enough so that the system has reached stationarity at time T_{tot}. Assume that the input to our system is characterised by the covariance V_{vac} (we can assume this WLOG by using the trick from Sec. 6.1). We also employ a quantum absorber system characterised by θ_0, so that at $\theta = \theta_0$ the output of the combined system will also be vacuum; we will use this observation many times in the following.

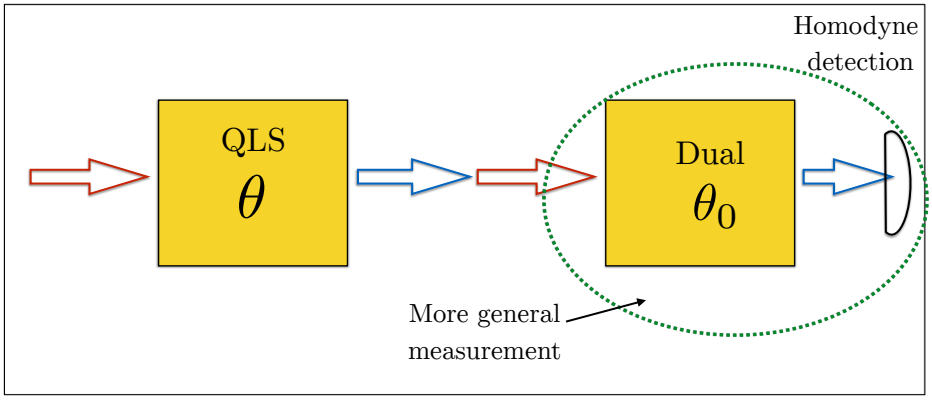

FIGURE 9.2: Metrology setup with quantum absorber.

9.3.1 QFI Scaling Calculation Revisited

Recall from Sec. 6.11.4 that we can obtain an equivalent definition of the QFI by working in the time domain. By using a dual system this expression simplifies and enables us to understand the QFI enhancement from Sec. 8.3.1. Note that applying a dual system to the output field does not change the QFI.

Let us simplify things by discretising the process and working with increments of unit length. That is, consider $\breve{\mathbf{B}}_i = \int_{i-1}^{i} \breve{\mathbf{b}}_{\text{out}}(t)dt$ for $i = \{1, 2, ...T_{\text{tot}}\}$. Denote the covariance of this Gaussian process by the (quadrature picture) covariance matrix

$$V(\theta) := \text{Re}\begin{pmatrix} \langle \mathbf{Q}\mathbf{Q}^T \rangle & \langle \mathbf{Q}\mathbf{P}^T \rangle \\ \langle \mathbf{P}\mathbf{Q}^T \rangle & \langle \mathbf{P}\mathbf{P}^T \rangle \end{pmatrix},$$

where $\mathbf{Q}$ and $\mathbf{P}$ are vectors canonical coordinates of the T_{tot} discrete modes. It follows from [108] that the QFI of such a Gaussian model is given by

$$F(\theta) = \text{Tr}\left(V(\theta)^{-1} \frac{dV(\theta)}{d\theta} V(\theta)^{-1} \frac{dV(\theta)}{d\theta} \right). \tag{9.14}$$

Now let us evaluate the QFI at $\theta = \theta_0$, where the output is vacuum ($V(\theta) = \mathbb{1}$). Therefore the QFI may be written as $F(\theta = \theta_0) = \sum_{i,j} \left(\frac{dV}{d\theta}\right)^2_{i,j}\Big|_{\theta=\theta_0}$. Now, $\left(\frac{dV(\theta_0)}{d\theta}\right)_{i,j}\Big|_{\theta=\theta_0}$ is significant so long as $\frac{1}{2}|i-j| < \frac{1}{|\text{Re}(\lambda_{\min})|} := \tau$ where $\lambda_{\min}$ is the eigenvalue of A closest to the imaginary axis. Therefore $F(\theta) \propto T\tau$. So at opposite

ends of the spectrum we have:

(1) QFI of the order $\mathcal{O}(T_{\text{tot}})$, when the time is much larger than one over the spectral gap (standard scaling).

(2) QFI of the order $\mathcal{O}(T_{\text{Tot}}^2)$, when the spectral gap is comparable with T_{tot} (Heisenberg). In this case the useful information about the system is contained only within output correlations between times, t and s such that $|t-s| < \tau$, where τ is the inverse of the spectral gap. This observation will be key to developing our measurement and estimator in the following subsection.

9.3.2 Signal-to-Noise Ratio (SNR) for Quadrature Measurements

The Discrete Time Measurement

We now find a measurement and show how to construct an estimator enabling Heisenberg scaling. Initially it's simpler to understand how to do this if one works in discrete time. Consider the measurement

$$\mathbf{Y} = \sum_{i,j} \alpha_{i,j} \mathbf{X}_i \mathbf{X}_j, \tag{9.15}$$

where $\mathbf{X}_i$ is the position quadrature of the Gaussian mode $\breve{\mathbf{B}}_i$. The outcome can obtained by measuring $\mathbf{X}$ and then post-processing by weighting with the factor α_{ij}. Denote the outcomes of the operators $\mathbf{X}_i$ and $\mathbf{Y}$ by X_i and Y, respectively. The weighting factor α_{ij} will be prescribed later. Now $X_1, ..., X_{T_{\text{tot}}}$ form a stationary process with $\mathbb{E}[X_i] = 0$ and $\mathbb{E}[X_i X_j] = W_{ij}$, where the law of $X_1, ...X_{T_{\text{tot}}}$ depends on θ via the covariance W_{ij}. The CFI of the whole process is typically hard to calculate, so we seek a lower bound. A metric often used to characterise the performance of precision measurements is the signal-to-noise ratio (SNR) [121], which is a lower bound for CFI. The SNR of Y is defined as

$$\text{SNR}_Y = \frac{\left(\frac{d\mathbb{E}[Y]}{d\theta}\right)^2}{\text{Var}[Y]} \tag{9.16}$$

The SNR gives the error in using a linear transformation of Y as an estimator for θ.

At $\theta = \theta_0$ all of the X_is are independent (because we are using an absorber), whereas at $\theta \neq \theta_0$ the process has long correlation length τ. Therefore, $\left(\frac{dV(\theta_0)}{d\theta}\right)_{i,j}$ is significant so long as $|i-j| < \tau$. Hence

$$\frac{d\mathbb{E}\left[Y\right]}{d\theta} = \sum_{ij} \alpha_{ij} \dot{V}_{ij} \approx \tau T_{\text{tot}}. \tag{9.17}$$

On the other hand evaluating the denominator of the SNR at $\theta = \theta_0$ we obtain

$$\begin{aligned}\text{Var}[Y] &= \sum_{ijkl} \alpha_{ij}\alpha_{kl}\mathbb{E}\left[(X_iX_j - V_{ij})(X_kX_l - V_{kl})\right] \\ &= \sum_{ijkl} \alpha_{ij}\alpha_{kl}\mathbb{E}\left[(X_iX_j - \delta_{ij})(X_kX_l - \delta_{kl})\right].\end{aligned}$$

Now,

- if $i \neq k$ and $j \neq l$ then the summand equals $\mathbb{E}\left[(X_iX_j - \delta_{ij})\right]^2 = 0$;
- if $i = k$ but $j \neq l$ then the summand equals $\mathbb{E}\left[(X_iX_j - \delta_{ij})(X_kX_l - \delta_{kl})\right] = \mathbb{E}[X_i^2X_jX_l] - \delta_{ij}\delta_{il} = 0$;
- if $i \neq k$ but $j = l$, then the summand equals $\mathbb{E}\left[(X_iX_j - \delta_{ij})(X_kX_l - \delta_{kl})\right] = \mathbb{E}[X_iX_kX_j^2] - \delta_{ij}\delta_{kj} = 0$.

The upshot is that the only contribution to $\text{Var}[Y]$ is when $(i,j) = (k,l)$. Therefore

$$\begin{aligned}\text{Var}[Y] &= \sum_{ij} \alpha_{ij}^2 \mathbb{E}\left[(X_iX_j - \delta_{ij})^2\right] \\ &= \sum_{i} \alpha_{ii}^2 \mathbb{E}\left[(X_i^2 - 1)^2\right] + \sum_{i,j:i\neq j} \alpha_{ij}\mathbb{E}\left[X_i^2\right]\mathbb{E}\left[X_j^2\right] \\ &= \sum_{i} \alpha_{ii}^2 \mathbb{E}\left[(X_i^2 - 1)^2\right] + \sum_{ij:i\neq j} \alpha_{ij}^2 V_{ii}V_{jj}.\end{aligned} \tag{9.18}$$

Now, both $\mathbb{E}\left[(X_i^2 - 1)^2\right]$ and V_{ii} are constants independent of i. Therefore, the variance depends on the shape of α_{ij}. Let $\alpha_{ij} = \alpha_{i-j}$ and consider the following two cases: (i) $\alpha_{ij} = 1$, (ii) $\alpha_{ij} = \alpha_{i-j} = e^{-\frac{|i-j|}{\tau}}$ (see Fig. 9.3).

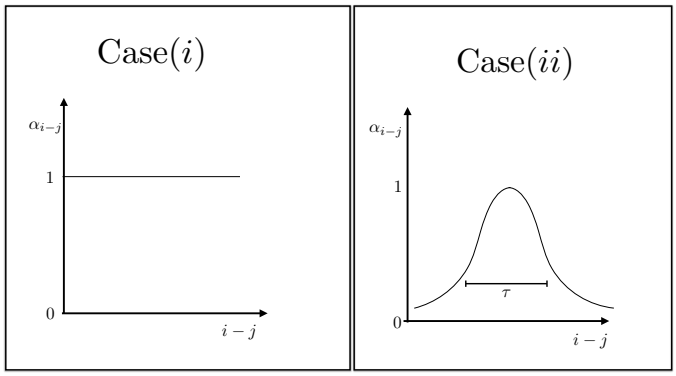

FIGURE 9.3: The figure compares the two weights, α_{ij}, that we consider here.

- Case (i) corresponds to a measurement of zero-frequency (or equivalently total integrated current) i.e $\mathbf{Y} = \left(\sum_i \mathbf{B}_i + \mathbf{B}_i^\dagger\right)^2$. In this case $\mathrm{Var}(Y) \sim T_{\mathrm{tot}} + T_{\mathrm{tot}}^2 \sim T_{\mathrm{tot}}^2$, so that $\mathrm{SNR}_Y \sim \frac{(\tau T_{\mathrm{tot}})^2}{T_{\mathrm{tot}}^2} = \tau^2$.
- Case (ii) corresponds to placing more weight on mode correlations within the stabilisation time (and less weight on longer autocorrelations) in accordance with the QFI calculation from Sec. 9.3.1. In this case $\mathrm{Var}(Y) \sim \tau + \tau T_{\mathrm{tot}} \sim \tau T$, so that $\mathrm{SNR}_Y \sim \frac{(\tau T_{\mathrm{tot}})^2}{\tau T_{\mathrm{tot}}} = \tau T_{\mathrm{tot}}$.

Therefore, the SNR is enhanced when α_{ij} has width order of the correlation length. The essential point is that if α_{ij} is not spread over all (i, j), as in the case of square of total integrated current, then the variance is not too large while the mean can still be large since the important contributions come from $|i - j| < \tau$.

Returning to Continuous Time

Now returning to continuous time, the analogue of (9.15) is given by

$$\mathbf{Y} = \int_0^{T_{\mathrm{tot}}} \int_0^{T_{\mathrm{tot}}} k(t, t')\mathbf{X}(t)\mathbf{X}(t')dtdt' \tag{9.19}$$

where $\mathbf{X}(t)$ is the quadrature measurement $\mathbf{X}(t) := \mathbf{b}_{\mathrm{out}}(t) + \mathbf{b}_{\mathrm{out}}^\dagger(t)$ and we have weighting factor $K(t, t') := e^{\frac{-|t-t'|}{\tau} + i\omega_0(t-t')}$. Notice that we have generalised our estimator by allowing for a frequency shift $\omega_0 \in \mathbb{R}$; the reason why we do this

will become clear shortly. Denote the outcomes of $\mathbf{X}(t)$ and $\mathbf{Y}$ by $X(t)$ and Y, respectively.

Let us consider explicitly calculating the SNR (9.16), where now Y is the continuous-time version of the measurement. Firstly, since at $\theta = \theta_0$ the input field is equal to the output field (as we are using the dual), the calculation of the denominator of the SNR is identical to the discrete time version above (i.e., case (ii)). Hence it is of order $\mathcal{O}(\tau T_{\text{tot}})$. Computing the numerator of the SNR directly entails calculating $\mathbb{E}[X(t)X(t')]$ by using the following expression, which is obtained from [122]:

$$\left\langle \breve{\mathbf{b}}_{\text{out}}(t)\breve{\mathbf{b}}^{\dagger}_{\text{out}}(t')\right\rangle = V\delta(t-t') \tag{9.20}$$
$$+\begin{cases} \int_0^s Ce^{A(t-r)}C^{\flat}V\left(C^{\flat}\right)^{\dagger}e^{A^{\dagger}(t'-r)}C^{\dagger}dr - Ce^{A(t-t')}C^{\flat}V & \text{if } t > t' \\ 0 & \text{if } t = t' \\ \int_0^t Ce^{A(t-r)}C^{\flat}V\left(C^{\flat}\right)^{\dagger}e^{A^{\dagger}(t'-r)}C^{\dagger}dr - V\left(Ce^{A(t'-t)}C^{\flat}\right)^{\dagger} & \text{if } t < t'. \end{cases}$$

Let us see this in an example.

Example 22. *Consider a one mode passive cavity, where this time the input is $V(N,M)$ rather than vacuum, as in example 20 from Sec. 8.3. Recall that $\tau = 1/c^2$ (assuming that $c \in \mathbb{R}$) and let $\tau = T_{\text{tot}}^{1-\epsilon}$ as in example 20. For simplicity in the following calculations, we observe the experiment over the interval $t \in [T_{\text{tot}}^{1-\epsilon/2}, T_{\text{tot}}]$ so that $e^{At} \approx 0$ for all t and $T_{\text{tot}} - T_{\text{tot}}^{1-\epsilon/2} \approx T_{\text{tot}}$. We shall explicitly compute the SNR here in the case when $\Omega = 0$. Firstly, we can compute Eq. (9.20); doing so and summing over the elements of the resulting matrix we obtain:*

$$\mathbb{E}[X(t)X(t')] = \left\langle \mathbf{X}(t)\mathbf{X}^{\dagger}(t')\right\rangle = (2N+1+M+\overline{M})\delta(t-t')$$
$$+\begin{cases} -Mc^2\left(\frac{c^2}{2A}+1\right)e^{A(t-t')} - \overline{M}c^2\left(\frac{c^2}{2\overline{A}}+1\right)e^{\overline{A}(t-t')} & \textit{if } t > t' \\ 0 & \textit{if } t = t' \\ -Mc^2\left(\frac{c^2}{2A}+1\right)e^{A(t'-t)} - \overline{M}c^2\left(\frac{c^2}{2\overline{A}}+1\right)e^{\overline{A}(t'-t)} & \textit{if } t < t'. \end{cases}$$

Note that if $\Omega = 0$ we have $\mathbb{E}[X(t)X(t')] = (2N+1+M+\overline{M})\delta(t-t')$ and in particular the input equals the output, which shouldn't be surprising considering that the system is non-globally minimal in this case (see Sec. 6). The significance of this

is that we don't require a dual system in order to simplify the calculation of $\mathrm{Var}[Y]$. *In particular we have* $\mathrm{Var}[Y] = \mathcal{O}(\tau T_{\mathrm{tot}})$ *here, for the same reason that we had it for the case of vacuum input (see Eq.* (9.18)*).*

Now, computing the numerator of the SNR (9.16) *from this for the case of estimating* Ω *gives*

$$\begin{aligned}
&\int_0^{T_{\mathrm{tot}}}\int_0^{T_{\mathrm{tot}}} k(t,t')\frac{d\mathbb{E}\left[X(t)X(t')\right]}{d\Omega}dtdt' \qquad (9.21)\\
&= 2c^2\mathrm{Re}\left\{\frac{-M\dot{A}c^2}{2A^2}\left[\frac{1}{A+u}\left(T_{\mathrm{tot}}-\frac{1}{A+u}\right)+\frac{1}{A+\overline{u}}\left(T_{\mathrm{tot}}-\frac{1}{A+\overline{u}}\right)\right]\right.\\
&\left.-T_{\mathrm{tot}}\,M\dot{A}\left(\frac{c^2}{2A}+1\right)\left[\frac{1}{(A+u)^2}+\frac{1}{(A+\overline{u})^2}\right]\right\},
\end{aligned}$$

where $u = -\tau - i\omega_0$. *Notice that Eq.* (9.21) *is invariant under* $u \mapsto \overline{u}$. *We evaluate Eq.* (9.21) *at* $\Omega = 0$*; we have a simplification since* $\left(\frac{c^2}{2A}+1\right) = 0$. *Setting also* $\omega_0 = 0$ *and using* $\tau = 1/c^2$, *we obtain:*

$$\left.\frac{d\mathbb{E}\left[Y\right]}{d\Omega}\right|_{\Omega=\omega_0=0} = \frac{16}{3}\tau(T_{\mathrm{tot}}+\frac{2}{3}\tau)\mathrm{Re}(iM) \approx \frac{16}{3}\tau T_{\mathrm{tot}}\mathrm{Re}(iM)$$

in the limit T_{tot} *large. Hence the level of scaling as in case (ii) above is realised. One can show that in the case* $\Omega \neq 0$ *the frequency choices* $\omega_0 = \pm\Omega$ *would equally realise the* $\mathcal{O}(\tau T_{\mathrm{tot}})$ *scaling.*

Interpretation of our Measurement in the Frequency Domain

In general Eq. (9.20) (and hence the SNR) is difficult to calculate directly. Our choice of measurement and the reason why the weighting factor $K(t,t')$ enhanced the SNR may better understood in the frequency domain. Recall from Sec. 8.3.1 that since the input-output map acts separately on different frequencies and the input state is a product, the QFI is the integral of the QFI for each individual frequency with respect to frequency. We saw how the main contributions to this integral came from two small intervals $|\omega \pm \mathrm{Im}(z_1)| \sim \frac{1}{\tau}$ where z_1 is the eigenvalue of A closest to the imaginary axis. Recall that the value of QFI rate in this interval was τ^2, so that the overall QFI is of the order $T_{\mathrm{tot}} \times \frac{\tau^2}{\tau} = T_{\mathrm{tot}}\tau$. We shall now see that $\mathbf{Y}$ is similar to a

frequency band-limited measurement of all frequency quadratures

$$\mathbf{X}(\omega) := \int_0^{T_{\text{tot}}} e^{i\omega t}\mathbf{X}(t)\mathrm{d}t$$

over a bandwidth of $1/\tau$ centred on the frequency ω_0. Therefore, the fact that there are two frequency bands containing increased information about the parameter from the calculation in Sec. 8.3.1 (see Fig. 8.7), explains why two frequency choices $\omega_0 = \pm\Omega$ in example 22 would have worked equally well.

Consider measuring $\mathbf{X}(\omega)$, over frequency band $|\omega - \mathrm{Im}(z_1)| \sim \frac{1}{\tau}$. Denote the outcomes by $X(\omega)$. The information about θ is contained within the second order moments, hence we consider the following as an estimator:

$$Z := 2\tau \int_{\mathrm{Im}(z_1)-\frac{1}{\tau}}^{\mathrm{Im}(z_1)+\frac{1}{\tau}} X(\omega)X(\omega)^\dagger \mathrm{d}\omega. \tag{9.22}$$

Note that the factor 2τ is a normalisation factor. Now

$$\begin{aligned}
Z &= 2\tau \int_{\mathrm{Im}(z_1)-\frac{1}{\tau}}^{\mathrm{Im}(z_1)+\frac{1}{\tau}} \left(\int_0^{T_{\text{tot}}} \int_0^{T_{\text{tot}}} e^{i\omega(t-t')} X(t)X(t')\mathrm{d}t\mathrm{d}t' \right) \mathrm{d}\omega \\
&\approx 2\tau \int_0^{T_{\text{tot}}} \int_0^{T_{\text{tot}}} \left(\int_{-\infty}^{\infty} e^{i\omega(t-t')} e^{-|\omega-\mathrm{Im}(z_1)|\tau} X(t)X(t')\mathrm{d}\omega \right) \mathrm{d}t\mathrm{d}t' \\
&= \int_0^{T_{\text{tot}}} \int_0^{T_{\text{tot}}} e^{i\mathrm{Im}(z_1)(t-t')} \frac{4\tau^2}{\tau^2 + (t-t')^2} X(t)X(t')\mathrm{d}t\mathrm{d}t' \\
&\approx Y|_{\omega_0=\mathrm{Im}(z_1)}
\end{aligned}$$

Here we have (9.22) in the first equality and then switched the order integration in the second.

Therefore, the estimator Z is approximately equal to the estimator Y. Hence, as mentioned above, we can interpret our estimator Y in the frequency domain as frequency band-limited measurement of width $1/\tau$ centred on the frequency ω_0. This calculation allows us to calculate the numerator of the SNR (9.16) by using Z rather

than Y and show that it is of the order in case (ii) above. To this end we have

$$\begin{aligned}\frac{d\mathbb{E}\left[Z\right]}{d\theta} &= 2\tau \int_{\mathrm{Im}(z_1)-\frac{1}{\tau}}^{\mathrm{Im}(z_1)+\frac{1}{\tau}} \frac{d\mathbb{E}\left[X(\omega)X(\omega)^\dagger\right]}{d\theta} \mathrm{d}\omega \\ &= \mathcal{O}(\tau T_{\mathrm{tot}}),\end{aligned} \tag{9.23}$$

which follows by using the observation (8.29)[2]. Therefore, if we choose $\omega_0 = \pm i\mathrm{Im}(\hat{z}_1)$, where $\hat{z}_1$ is an estimator of z_1 (the spectral gap of A), we can extract information from either of the most informative frequency intervals $|\omega - \mathrm{Im}(z_1)| \sim \frac{1}{\tau}$. Here, our estimator $\hat{z}_1$ has been obtained from a preliminary experiment with MSE $\mathcal{O}(\tau^{-2})$.

Remark 17. *Notice that our estimator, which claims Heisenberg level scaling, seemingly requires Heisenberg level knowledge of the z_1; that is the MSE of $\hat{z}_1$ is $\mathcal{O}(\tau^{-2})$. However, an adaptive procedure like the one in Sec. 8.1.3 for the time-dependent approach may be applied to overcome this problem and achieve Heisenberg scaling (we do not discuss this any further here).*

Remark 18. *Notice that the scaling $\mathcal{O}(\tau T_{\mathrm{tot}})$ in Eq. (9.23) is possible with or without the absorber system. The action of the dual system in the frequency domain on the independent modes is a frequency dependent rotation. That is, the absorber doesn't determine or shift the most informative frequency interval, but rather rotates phase space on each particular frequency; the result of this on the scaling in Eq. (9.23) is a constant factor. We discuss this is more detail in Sec. 9.3.3.*

Now the quadrature, $\mathbf{X}(t)$, that we chose to measure above may not be the best quadrature to measure. Moreover, since our measurement is very similar to a frequency band-limited measurement above, where each frequency behaves independently, it could be the case that the optimal quadrature may differ across frequencies. If we were to measure these frequency domain quadratures with frequency dependent phases, we would get the exact optimal measurement. However, this measurement will not translate into one that can be done sequentially in time; for that we would need to have equal phases for all frequencies, which happens in the measurement (9.19).

[2]We originally only showed (8.29) for the case of passive QLS, but it is also true for general QLSs.

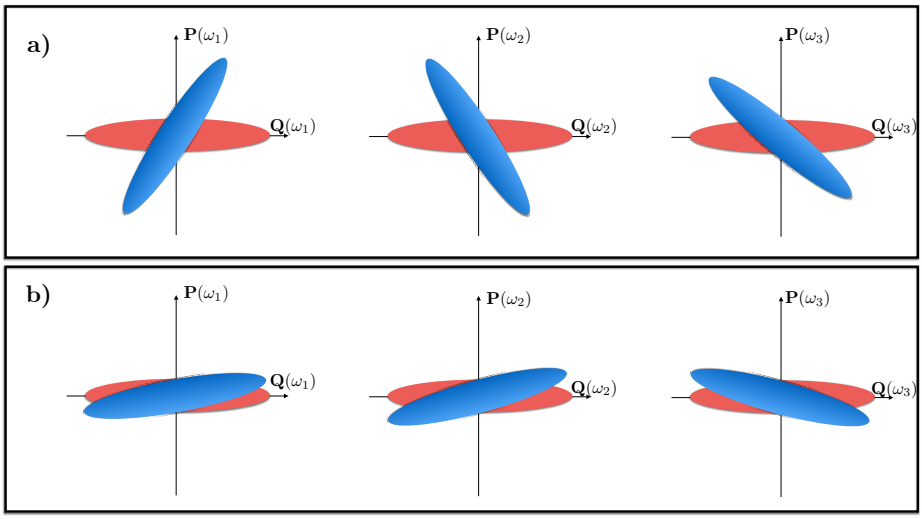

FIGURE 9.4: This figure shows the action of the system on the input viewed in the frequency domain. The inputs are shown in red and the output in blue for three choices of frequency. Note that the input is the same for all frequencies. In a) the system rotates by a frequency dependent angle. Part b) shows that the effect of the dual system is to make all rotations smaller.

9.3.3 Optimal Estimation Using Adaptive Measurements

As mentioned above, our strategy in the previous subsection is by no means optimal; it fails to be so by a constant factor. We now discuss a method based on the work in [108, 120] to reach optimality (asymptotically in the limit of large times). In this subsection we shall showcase the capability of the absorber system for estimation.

For simplicity, we consider a SISO PQLS in this subsection with input $V(N, M)$ (rather than vacuum), as in Sec. 8.3. In the frequency domain, all modes are independent and the input-output map is a rotation of a squeezed state by a frequency dependent parameter (see Fig. 9.4). The action of the absorber system will be to make the rotation action smaller (on every frequency mode). This is the essence of the trick to reach optimality; we will use some of our (time) resources to obtain a rough estimate for the system and then perform a second experiment using the dual. The effect of this will be to zoom in on the 'interval of uncertainty'; that is, rather than considering the whole of the parameter space the dual enables us to restrict our analysis to the smaller unknown region of it.

The above is all a bit hand wavy, so let's be more precise. Let us consider one frequency in the input-output map. The QFI per unit time of a particular frequency was given by (8.28) (recall that all frequencies are independent so the QFI is additive across all frequencies). The question of the optimal measurement on a particular frequency mode is essentially a Gaussian estimation problem and has been solved [108, 120]. The optimal measurement is homodyne (and realises the scaling in the QFI), however the direction to measure depends on the true value [108, 120]. This suggests that we need an adaptive strategy in order to attain optimal precision in the limit of large time. That is, using information from previous steps in order to attain bounds. Returning to our problem across all frequencies, this issue is further complicated by the fact that the optimal quadrature to measure may be different for each frequency.

The strategy that we take is as follows:

(1) Use the estimator from Sec. 9.3.2 to perform a preliminary estimate of θ, given by $\hat{\theta}_0$, using time resource T_{pre} that has MSE $\mathcal{O}\left(\tau T_{pre}\right)^{-1}$.

(2) Use a dual system to 'negate' the original system with parameter $\hat{\theta}_0$. The upshot of this is that the input-output map has the action of a small rotation (see Fig. 9.4). The rotation on frequency ω, denoted by $\lambda(\omega)$, will depend on θ in the following way

$$\lambda(\omega) \sim \begin{cases} \theta\tau & |\pm\omega - \omega_0| \sim \frac{1}{\tau} \\ \theta & \text{otherwise} \end{cases}$$

for some constant ω_0 (see Fig. 8.7).

(3) Suppose that ϕ is the direction of squeezing of the input, then perform a measurement of the quadrature with phase $\phi + \frac{\pi}{2} + \phi(N)$. The function $\phi(N)$ is just a constant function dependent on the level of squeezing in the input; we do not state it here (see [120]). For example, if the input is momentum squeezed then one should measure the quadrature with phase $\phi(N)$.

(4) Choose the estimator of θ as the maximum likelihood estimator.

If the total time of the experiment, T_{tot}, is chosen so that $T_{pre} = T_{\text{tot}}^{\epsilon}$ for $\epsilon > \frac{1}{2}$ then by [108] we obtain optimal precision. The key point is that working time domain, the optimal scaling may be achieved (in the small gap approximation) by measuring sequentially in time, i.e., performing a homodyne measurement and using the estimator (9.19), where this time $\mathbf{X}(t)$ is the quadrature from (3).

Remark 19. *In [108, 120] (i.e. the Gaussian estimation problem) they didn't use a dual system. Instead they negated the known part of the system in the measurement by adding an extra phase to the measurement and measuring $\phi + \hat{\theta}_0$. However, in the frequency domain this would require measuring a different quadrature for each frequency. The power of using the dual is in that allows one to simplify the final measurement so that the same quadrature can be measured across all frequencies.*

9.4 Further Applications and Outlook for Quantum Absorbers

In this chapter we have shown that for a given QLS there always exists a stable coherent quantum absorber. We discussed how quantum absorbers can be advantageous for quantum estimation for the estimation problem from Ch. 8. Let us now discuss other potential applications.

We have seen in Sec. 9.1 that the dual QLS is unique up to symplectic equivalence classes (see Theorem 5). Hence the transfer function belonging to this family of duals is unique; we call this the *dual transfer function*. The dual system is in some sense capturing the field output. This poses two interesting open questions.

Firstly, can the dual solution be used to find an alternative proof to the main identifiability result in Ch. 6 (as in Theorem 11)? In fact this was our main reason for studying quantum absorbers. Since the mapping between the transfer function and dual transfer function is one-to-one then it remains to show that the mapping between the dual transfer function and field output is one-to-one. However, this problem turns out to be just as difficult as the original problem problem in Ch. 6, as it still requires solving a spectral factorisation-type problem (this time with dual

systems). This is because if

$$\Xi_D(s)\Xi(s)V_{\text{vac}}\Xi(-\overline{s})^\dagger\Xi_D(-\overline{s})^\dagger = V_{\text{vac}}$$

then

$$\Psi(s) = \Xi_D(-\overline{s})^\flat V_{\text{vac}} \left(\Xi_D(s)^\dagger\right)^\flat,$$

where $\Xi_D(s)$ is the dual transfer function.

Now the dual system capturing the output of the QLS also means that it characterises the field output. That is, rather than the system being correlated with the field it becomes correlated with the dual system. This is a considerable simplification from working with an infinite number of modes in the field to a finite number in the dual. Perhaps this simplification isn't so surprising after all following the *Gaussian Schmidt Decomposition* in [71] (see Theorem 4). It would be interesting to investigate how precise we can make the above; for instance, is it the case that there is an isomorphism between the modes in the dual and the important modes in the output, i.e. those that are correlated with the internal system at stationarity. Further, can notions such as entanglement (or more general geometrical distances) or measurements be represented in an advantageous (due to their simplicity) way on the dual. If so, this could lead to potential applications in quantum control and metrology.

Quantum absorbers may also offer interesting applications to quantum communication, as they could enable sharing of entanglement at a distance [123].

Another application is to quantum control. In control theory a *quantum observer* is a purely quantum system that is capable of mimicking the behaviour of the system. The three characteristic properties of quantum observers are the following [124]:

- The observables of the observer should converge to the system variables (in some limit).
- The observer should be a physically realisable
- The plant should feedforward to the observer, but not the other way around. That is, there should be no back-action of the observer on the plant.

Using observers in control problems is an example of a coherent feedback scheme. The advantages of coherent feedback schemes are that they make use of non-commutative quantum signals so that there is no loss of information or coherence, which is not the as case in measurement-based feedback schemes. Despite recent results indicating that coherent schemes typically perform better than measurement-based schemes for some control objectives [125, 126], it is still in its incipient stage and is a very active research area. Typically the goal of a quantum observer is to map the mean values of the system. In classical control theory, the optimal way to do this is the Kalman filter. In [124] they compare a quantum observer based scheme with a measurement-based observer using the classical Kalman filter. The coherent scheme outperforms the classical one in terms of the estimation error. However, the quantum observer there is by no means optimal. The main difficulty with designing quantum observers is the physical relizability requirement. Now our quantum absorbers in Sec. 9.1 make natural quantum observers for the second order moments. In the asymptotic limit they map the covariance matrix of the system exactly. Our observers/absorbers satisfy all the desirable properties of observers and are particular interesting as they provide a purification of the system's stationary state. Therefore, one can imagine these being useful in certain control applications. However, one potential downside of using absorbers as observers is that the system will be maximally entangled with the observer and therefore share no entanglement with the field.

Chapter 10

Conclusion

In this thesis we have discussed various aspects of system identification split into two contrasting approaches: (1) Time-dependent input (or transfer function) identifiability and (2) stationary inputs (or power spectrum) identifiability.

In Ch. 5 we considered the time-dependent approach, where equivalent systems were characterised by the property that they have the same transfer function. We answered the first two questions set out in the abstract for these inputs. We have also addressed the same problems in the noisy scenario (recall that noise is modelled by additional channels that we cannot access). Finally, we studied *noise unobservable subspaces*, where part of the system is shielded from the noise, and found that such systems can be identified as in the noiseless case. Our noise unobservable subspaces work would make a great starting point for future research.

In Ch. 6 we considered the stationary approach. The characteristic quantity is the power spectrum in this case, which itself depends quadratically on the transfer function. Our main result was that under global minimality the power spectrum implies the transfer function uniquely, which is contrary to the analogous classical problem [45, 48, 49, 62]. We also developed identification methods, that is, how to construct a system realisation of the transfer function. We considered several extensions to our problem, including mixed inputs and the use of ancillary channels. One possible direction to extend this work would be to noisy inputs (i.e the analogous problem to the time-dependent input one discussed in Sec. 5.5).

The next main problem that we considered was parameter estimation for PQLSs in the time-dependent approach (Ch. 7). The emphasis was on finding a realistic scheme that can be implemented with current technology; our scheme is similar to

the one used at LIGO to implement gravitational waves [53, 54]. We considered both the single and multiple parameter scenario. An optimisation problem remains in the multiple parameter passive case; although we have proved that Heisenberg scaling is possible. We also extended a multiple quantum metrology result from [99] to our domain; that there is a linear advantage with respect to the number of parameters in terms of estimation accuracy by using entangled states between the independent channels. However, we also expressed our concerns in that their result (and indeed ours) is only valid under the assumption of a fixed total photon number. We discussed in Ch. 7 the main avenues to extend these results, i.e., to active systems or noisy inputs.

In the previous problem energy was the resource constraint. We also considered an estimation problem in Ch. 8 under a time constraint. We saw that when the system becomes dynamically unstable the scaling becomes quadratic (rather than linear) in the observation time. Ch. 8 was devoted to investigating and exploiting this phenomenon in both the time and stationary approaches.

Finally, we developed the notion of a quantum absorber for QLSs in Ch. 9. A quantum absorber for a given QLS is another QLS such that the output of the resultant system (obtained by combining the original with the absorber) is equal to the input. They are particularly useful because they provide a natural purification for the stationary state of the system. We showed that for any QLS, such an absorber exists. There are potentially many applications for absorbers, such as quantum control, quantum communication and quantum estimation [124, 125]. We discussed one application of the latter in detail in Sec. 9.3.

Appendix A

Finding a Minimal Classical Realization

In this appendix a set of (nonphysical) minimal and doubled-up matrices (A_0, B_0, C_0) are found that realizes the transfer function (5.15), which describes a (minimal) physical system (A, C).

We assume that the matrix A for the n-mode minimal system, (A, C), possesses $2n$ distinct eigenvalues each with a nonzero imaginary part. This requirement can be seen to be generic in the space of all quantum systems [15]. Moreover, it can also be shown that if λ_i is a complex eigenvalue of A with right eigenvector $\left(\begin{smallmatrix} R_i \\ S_i \end{smallmatrix}\right)$ and left eigenvector (U_i, V_i), then $\overline{\lambda}_i$ is also an eigenvalue with right eigenvector $\left(\begin{smallmatrix} S_i^{\#} \\ R_i^{\#} \end{smallmatrix}\right) = \Sigma\left(\begin{smallmatrix} R_i^{\#} \\ S_i^{\#} \end{smallmatrix}\right)$ and left eigenvector $\left(V_i^{\#}, U_i^{\#}\right) = \left(U_i^{\#}, V_i^{\#}\right)\Sigma_n$, where $R_i, S_i \in \mathbb{C}^{1\times n}$, $U_i, V_i \in \mathbb{C}^{n\times 1}$ and $\Sigma_n := \left(\begin{smallmatrix} 0_n & 1_n \\ 1_n & 0_n \end{smallmatrix}\right)$. That is, for each eigenvalue and eigenvector, there exists a corresponding mirror pair. This property follows from the fact that A has the doubled-up form $A := \Delta\left(A_-, A_+\right)$.

We now construct a minimal realization called Gilbert's realization [49]. The only thing that we need to take care of is that the realization we obtain is of the doubled-up form.

As the transfer function may be written as

$$\Xi(s) = \frac{N(s)}{\prod_{i=1}^{n}(s-\lambda_i)(s+\lambda_i)}.$$

we can perform a partial fraction expansion, so that

$$\Xi(s) = 1 + \sum_{i=1}^{n} \frac{P_i}{(s-\lambda_i)} + \frac{Q_i}{\left(s-\lambda_i^{\#}\right)}.$$

As we show below, the matrices P_i, Q_i are rank 1. Therefore there exist matrices $B_i \in \mathbb{C}^{1\times 2}$, $B_i' \in \mathbb{C}^{1\times 2}$, $C_i \in \mathbb{C}^{2\times 1}$, and $C_i' \in \mathbb{C}^{2\times 1}$ such that

$$C_i B_i = P_i \text{ and } C_i' B_i' = Q_i.$$

The Gilbert realization A_0, B_0, C_0 is

$$A_0 := \operatorname{Diag}\left(\lambda_1, \ldots, \lambda_n, \overline{\lambda}_1, \ldots, \overline{\lambda}_n\right),$$

$$B_0 := \begin{bmatrix} B_1 \\ \vdots \\ B_n \\ B_1' \\ \vdots \\ B_n' \end{bmatrix}$$

and

$$C_0 := \begin{bmatrix} C_1 & \ldots & C_n & C_1' & \ldots & C_n' \end{bmatrix}.$$

From the expression of the physical transfer function we have

$$C\,(s-A)^{-1}\,C^{\flat} = \sum_{i=1}^{n} \frac{W_i}{s-\lambda_i} + \frac{\Sigma W_i^{\#} \Sigma}{s-\lambda_i^{\#}}$$

where W_i are the rank-one matrices

$$W_i = \begin{pmatrix} C_- R_i + C_+ S_i \\ C_+^{\#} R_i + C_i^{\#} S_i \end{pmatrix} \begin{pmatrix} U_i C_-^{\dagger} - V_i C_+^{\dagger} & U_i C_+^{T} + V_i C_-^{T} \end{pmatrix}.$$

Having fixed B_i and C_i the matrices B_i' and C_i' can then be chosen as

$$B_i' = B_i^{\#}\Sigma_2 \text{ and } C_i' = \Sigma_2 C_i^{\#} \tag{A.1}$$

and so the matrices (A_0, B_0, C_0) are of the doubled-up type.

Note that using Gilbert's realization on MIMO systems can also be seen to give a minimal doubled-up realization, but we do not discuss this any further here.

Appendix B

Proof of Lemma 4

Proof. Firstly define $\{e_1, ..., e_{4n}\}$ as the canonical basis of $\mathbb{C}^{4n}$. By property (6.2) of proper LBT matrices it is clear that $y^{(i)} := \begin{pmatrix} 0 \\ y_2^{(i)} \end{pmatrix} \in \text{Span}\{e_{2n+1}, ..., e_{4n}\}$. Further, as there are $2n$ of them they must form a basis of $\text{Span}\{e_{2n+1}, ..., e_{4n}\}$. Suppose $y^{(i)}$ has generalised eigenvector rank m_i, then as as $\tilde{A}' = T\tilde{A}T^{-1}$ we have

$$\begin{aligned}
\left(\tilde{A}' - \lambda^{(i)}\right)^{m_i} Ty^{(i)} &= \left(T\tilde{A}T^{-1} - \lambda^{(i)}\right)^{m_i} Ty^{(i)} \\
&= T\left(\tilde{A} - \lambda^{(i)}\right)^{m_i} y^{(i)} \\
&= 0.
\end{aligned}$$

Therefore, $Ty^{(i)}$ are generalised eigenvectors of $\tilde{A}'$ associated to $\lambda^{(i)}$. Hence, because $\tilde{A}'$ is also assumed to be proper LBT, it follows that $\text{Span}\{Ty^{(i)}\} \subset \text{Span}\{e_{2n+1}, ..., e_{4n}\}$. Finally,

$$\begin{aligned}
T\text{Span}\{e_{2n+1}, ..., e_{4n}\} &= T\text{Span}\{y^{(i)}\} \\
&= \text{Span}\{Ty^{(i)}\} \\
&\subset \text{Span}\{e_{2n+1}, ..., e_{4n}\}.
\end{aligned}$$

The invertibility of T has been used in getting from the first to the second line. This implies that T is LBT, as required. □

Appendix C

Showing Existence of a Minimal Physical System with Transfer Function (6.13)

Firstly, since we know that the system described by $\Xi(s)$ is physical, then the result of connecting it in series to another physical quantum system will be physical. To this end, consider the system

$$\tilde{\mathcal{G}} = \mathcal{G} \triangleleft \mathcal{G}_n \triangleleft ... \triangleleft \mathcal{G}_1,$$

where G was our original system and G_i is a single mode (unstable) active system with coupling $c_- = 0$, $c_+ = \sqrt{2\mathrm{Re}\mu_i}$, and Hamiltonian $\Omega_- = \mathrm{Im}\lambda_i$, $\Omega_+ = 0$. The system $\tilde{\mathcal{G}}$ is physical and is described by the transfer function $\Xi^{(2)}(s)$ (Eq. (6.13)). Also $\tilde{\mathcal{G}}$ must be stable because the transfer function $\Xi^{(2)}(s)$ has poles in the left-complex plane only because $\Xi(s)$ and $\Xi^{(1)}(s)$ do. However, it is not minimal.

To find a minimal system employ the quantum Kalman decomposition from [80]. The result is that this system may be written in the form of eq. (103) and (104) in [80]. Hence the system is TFE to the *minimal* system with matrices (in quadrature form) $\left(\tilde{A}_{co}, B_{co}, C_{co}\right)$ from [80]. This system gives a minimal realisation of the transfer function $\Xi^{(2)}(s)$. It can also can be verified that it is physical (this either follows because its transfer function is doubled-up and symplectic [13] or alternatively from the results in [80]) and that the matrices $\left(\tilde{A}_{co}, B_{co}, C_{co}\right)$ are of doubled-up type, as required.

Finally, since two stable and minimal quantum systems connected in series is always minimal (see a proof of this below), then it is clear that $\Xi^{(2)}(s)$ must necessarily be of size $n-k$. To see the previous claim, suppose that we have two minimal systems (C_1, A_1) and (C_2, A_2), where C_i is the coupling matrix of the system and A_1 is the usual system matrix. Connecting these systems in series ((C_1, A_1) into (C_2, A_2)) we get the resultant coupling and system matrices:

$$(C, A) := \left(\begin{pmatrix} C_1 & C_2 \end{pmatrix}, \begin{pmatrix} A_1 & 0 \\ -C_2^\flat C_1 & A_2 \end{pmatrix} \right). \tag{C.1}$$

Recall that in order to show that the QLS (C,A) is minimal it is enough to show that the pair $(A, -C^\flat)$ is controllable [17]. Controllability of $(A, -C^\flat)$ is equivalent to the statement: for all eigenvalues and left-eigenvectors of A, i.e. $vA = v\lambda$ then $vC^\flat \neq 0$. Letting $v = (y_1, y_2)$ where y_i are both of size $2n$, then there are two cases to consider; either $y_2 = 0$ or $y_2 \neq 0$.

- If $y_2 = 0$ then Eq. (C.1) implies that $y_1 A_1 = \lambda y_1$. Therefore, by controllability of the first system we must have $vC^\flat = y_1 C_1^\flat \neq 0$ and so the system is controllable.

- If $y_2 \neq 0$ then $(y_1, y_2)\, A = (y_1, y_2)\, \lambda$ implies that $y_2 A_2 = y_2 \lambda$. Note that by stability $\mathrm{Re}(\lambda) < 0$. Hence by controllability of the second system $y_2 C_2^\flat \neq 0$. Suppose to the contrary that $(A, -C^\flat)$ is not controllable. Then $y_1 C_1^\flat + y_2 C_2^\flat = 0$, which together with $(y_1, y_2)\, A = (y_1, y_2)\, \lambda$ would imply that

  $$y_1 \left(A_1 + C_1^\flat C_1 \right) = y_1 \lambda. \tag{C.2}$$

  Or equivalently

  $$y_1 A_1^\flat = -y_1 \lambda. \tag{C.3}$$

  This equation implies that $\mathrm{Re}(\lambda) > 0$, which is a contradiction.

Appendix D

Proof of Theorem 11

As outlined in the proof sketch, we need to show (1)-(3).

D.1 Step (1)

Firstly, the condition $\tilde{B}' = T\tilde{B}$ is equivalent to

$$\begin{pmatrix} -C'^{\dagger}V_{\text{vac}} \\ C'^{\dagger} \end{pmatrix} = K\Sigma T\Sigma K \begin{pmatrix} -C^{\dagger}V_{\text{vac}} \\ C^{\dagger} \end{pmatrix},$$

where

$$K = \begin{pmatrix} J & 0 \\ 0 & -J \end{pmatrix} \quad \text{and} \quad \Sigma = \begin{pmatrix} 0 & 1 \\ 1 & 0 \end{pmatrix}.$$

Hence

$$\begin{pmatrix} -V_{\text{vac}}\tilde{C}' & \tilde{C}' \end{pmatrix} = \begin{pmatrix} -V_{\text{vac}}\tilde{C} & \tilde{C} \end{pmatrix} K\Sigma T^{\dagger}\Sigma K.$$

Therefore, combining this the condition $\tilde{C}' = \tilde{C}T^{-1}$ we have

$$\tilde{C} = \tilde{C}K\Sigma T^{\dagger}\Sigma KT. \tag{D.1}$$

Now,

$$\begin{aligned} \tilde{A}' &= -K\Sigma\tilde{A}'^{\dagger}\Sigma K \\ &= -K\Sigma\left(T^{\dagger}\right)^{-1}\tilde{A}^{\dagger}T^{\dagger}\Sigma K \\ &= K\Sigma\left(T^{\dagger}\right)^{-1}\Sigma K\tilde{A}K\Sigma T^{\dagger}\Sigma K, \end{aligned} \tag{D.2}$$

where $\tilde{A}' = T\tilde{A}T^{-1}$ has been used to obtain the second line.

And so

$$\begin{aligned}\tilde{C}\tilde{A}T^{-1} &= \tilde{C}'\tilde{A}' \\ &= \tilde{C}'K\Sigma\left(T^{\dagger}\right)^{-1}\Sigma K\tilde{A}K\Sigma T^{\dagger}\Sigma K \\ &= \left(\tilde{C}T^{-1}K\Sigma\left(T^{\dagger}\right)^{-1}\Sigma K\right)\tilde{A}K\Sigma T^{\dagger}\Sigma K \\ &= \tilde{C}\tilde{A}K\Sigma T^{\dagger}\Sigma K,\end{aligned}$$

where Eq. (D.1) has been used to obtain the fourth line. Thus

$$\tilde{C}\tilde{A} = \left(\tilde{C}\tilde{A}\right)K\Sigma T^{\dagger}\Sigma KT. \tag{D.3}$$

Claim 1.

$$\tilde{C}\tilde{A}^{k} = \left(\tilde{C}\tilde{A}^{k}\right)K\Sigma T^{\dagger}\Sigma KT. \tag{D.4}$$

for all $k \geq 0$.

Proof. We prove this by induction. Note that we already know it to be true for $k = 0$ and $k = 1$ (see Eq. (D.1) and (D.3)). To this end, suppose that it is true for $k - 1$. Therefore,

$$\begin{aligned}\tilde{C}'\tilde{A}'^{k} &= \tilde{C}'\left(\tilde{A}'\right)^{k-1}\tilde{A}' \\ &= \tilde{C}'\left(\tilde{A}'\right)^{k-1}K\Sigma\left(T^{\dagger}\right)^{-1}\Sigma K\tilde{A}K\Sigma T^{\dagger}\Sigma K \\ &= \left(\tilde{C}\tilde{A}^{k-1}T^{-1}K\Sigma\left(T^{\dagger}\right)^{-1}\Sigma K\right)\tilde{A}K\Sigma T^{\dagger}\Sigma K \\ &= \tilde{C}\tilde{A}^{k}K\Sigma T^{\dagger}\Sigma K.\end{aligned}$$

by using Eqs. (D.2) and (6.17). Finally, using the observation $\tilde{C}'\tilde{A}'^{k} = \tilde{C}\tilde{A}^{k}T^{-1}$ completes the proof. □

Finally, following this claim we have:

$$\begin{aligned}\mathcal{O} &= \mathcal{O}K\Sigma T^{\dagger}\Sigma KT \\ &= \mathcal{O}\begin{pmatrix} T_4^{\flat} & 0 \\ -T_3^{\flat} & T_1^{\flat}\end{pmatrix}T.\end{aligned}$$

D.2 Step (2)

For this step it is sufficient to prove the following claim.

Claim 2.

$$\tilde{C}\tilde{A}^k \begin{pmatrix} T_4^\flat - T_1^\flat \\ -T_3^\flat \end{pmatrix} = 0$$

for all $k = 0, 1, 2, \ldots$.

Proof. Using the results of Appendix D.1 we know that equivalent systems are related via

$$\tilde{C}'\tilde{A}'^k = \tilde{C}\tilde{A}^k \begin{pmatrix} T_4^\flat & 0 \\ -T_3^\flat & T_1^\flat \end{pmatrix}. \tag{D.5}$$

Also note that the condition $C'A'^k = CA^kT_1^b$ holds.

We first see this result for $k = 0$. Eq. (D.5) for $k = 0$ reads

$$\left(-V_{\text{vac}}C', C' \right) = \left(-V_{\text{vac}}CT_4^\flat - CT_3^\flat, CT_1^\flat \right).$$

Therefore, adding the first entry to V_{vac} times the second entry:

$$0 = -V_{\text{vac}}C\left(T_4^\flat - T_1^\flat\right) + C\left(-T_3^\flat\right),$$

which shows the result for $k = 0$.

The result for $k \in \mathbb{N}$ goes along the same lines, but is a little more involved. Firstly, observe that $\tilde{A}^k$ may be written as

$$\tilde{A}^k = \begin{pmatrix} \left(-A^\flat\right)^k & 0 \\ e_k & A^k \end{pmatrix},$$

where $e_k = A^0C^\flat V_{\text{vac}}C\left(-A^\flat\right)^{k-1} + \ldots + A^{k-1}C^\flat V_{\text{vac}}C\left(-A^\flat\right)^0$ (and similarly for the primed matrices). Now, from Eq. (D.5) we have

$$\begin{aligned} &\left(-V_{\text{vac}}C'\left(-A'^\flat\right)^k + C'A'^{k-1}C'^\flat V_{\text{vac}}C' - C'e'_{k-1}A'^\flat,\ C'A'^k \right) \\ &= \left(-V_{\text{vac}}C\left(-A^\flat\right)^k T_4^b + CA^{k-1}C^\flat V_{\text{vac}}CT_4^\flat - Ce_{k-1}A^\flat T_4^\flat - CA^kT_3^\flat,\ CA^kT_1^\flat \right). \end{aligned} \tag{D.6}$$

Again adding the first block to V_{vac} times the second block gives

$$H' = \tilde{C}\tilde{A}^k \begin{pmatrix} T_4^\flat - T_1^\flat \\ -T_3^\flat \end{pmatrix} + HT_1^b, \tag{D.7}$$

where

$$\begin{aligned} H &:= -V_{\text{vac}}C\left(-A^\flat\right)^k + CA^{k-1}C^\flat V_{\text{vac}}C - Ce_{k-1}A^\flat + V_{\text{vac}}CA^k \\ H' &:= -V_{\text{vac}}C'\left(-A'^\flat\right)^k + C'A'^{k-1}C'^\flat V_{\text{vac}}C' - C'e'_{k-1}A'^\flat + V_{\text{vac}}C'A'^k \end{aligned}$$

Now, observe that

$$\begin{aligned} H' &= V_{\text{vac}}C'A'^k + \left(V_{\text{vac}}C'\left(-A'^\flat\right)^{k-1} - C'e'_{k-1}\right)A'^\flat + C'A'^{k-1}C'^\flat V_{\text{vac}}C' \\ &= V_{\text{vac}}C'A'^k + \left(V_{\text{vac}}C'\left(-A'^\flat\right)^{k-1} - C'e'_{k-1}\right)\left(-A' - C'^\flat C'\right) \\ &+ C'A'^{k-1}C'^\flat V_{\text{vac}}C' \\ &= V_{\text{vac}}C'A'^k + \left(-V_{\text{vac}}C'\left(-A'^\flat\right)^{k-1} + C'e'_{k-1}\right)A' \\ &+ \left(-V_{\text{vac}}C'\left(-A'^\flat\right)^{k-1}C'^\flat + C'e'_{k-1}C'^\flat + C'A'^{k-1}C'^\flat V_{\text{vac}}\right)C' \\ &= V_{\text{vac}}C'A'^k + G'_{k-1}A' - \tilde{C}'\left(\tilde{A}'\right)^{k-1}\tilde{B}'C', \end{aligned} \tag{D.8}$$

where $G'_k := -V_{\text{vac}}C'\left(-A'^\flat\right)^k + C'e'_k$. Here we have used the realisability condition $A + A^\flat + C^\flat C = 0$ on the second line and then rearranged.

Now, let us obtain a recursive expression for G_k. Firstly, using the definition of e_k and the substitution $A' + A'^\flat + C'^\flat C' = 0$:

$$\begin{aligned} G'_k &= -V_{\text{vac}}C'\left(-A'^\flat\right)^k + \sum_{j=0}^{k-1} C'A'^{k-1-j}C'^\flat V_{\text{vac}}C'\left(-A'^\flat\right)^j \\ &= -V_{\text{vac}}C'\left(-A'^\flat\right)^{k-1}\left(A' + C'^\flat C'\right) \\ &+ \sum_{j=1}^{k-1} C'A'^{k-1-j}C'^\flat V_{\text{vac}}C'\left(-A'^\flat\right)^{j-1}\left(A' + C'^\flat C'\right) \\ &+ C'A'^{k-1}C'^\flat V_{\text{vac}}C'\left(-A'^\flat\right)^0 \end{aligned}$$

Rearranging this and using the definition of e_k again we obtain

$$\begin{aligned}
G'_k = &\Big(-V_{\text{vac}}C'\left(-A'^{\flat}\right)^{k-1}C'^{\flat} + C'A'^{k-1}C'^{\flat}V_{\text{vac}} \\
&+C'\left[\sum_{j=0}^{k-2} A'^{k-2-j}C'^{\flat}V_{\text{vac}}C'\left(-A'^{\flat}\right)^{j}\right]C'^{\flat}\Big)C' \\
&+\left(-V_{\text{vac}}C'\left(-A'^{\flat}\right)^{k-1} + C'\sum_{j=0}^{k-2} A'^{k-2-j}C'^{\flat}V_{\text{vac}}C'\left(-A'^{\flat}\right)^{j}\right)A' \\
&=\left(-V_{\text{vac}}C'\left(-A'^{\flat}\right)^{k-1}C'^{\flat} + C'A'^{k-1}C'^{\flat}V_{\text{vac}} + C'e'_{k-1}C'^{\flat}\right)C' \\
&+\left(-V_{\text{vac}}C'\left(-A'^{\flat}\right)^{k-1} + C'e'_{k-1}\right)A' \\
&=-\tilde{C}'\tilde{A}'^{k-1}\tilde{B}'C' + G_{k-1}A'.
\end{aligned}$$

Also note that

$$\begin{aligned}
G_1 &= V_{\text{vac}}C'A'^{\flat} + C'C'^{\flat}V_{\text{vac}}C' \\
&= -V_{\text{vac}}C'A' + \left(-V_{\text{vac}}C'C'^{\flat} + C'C'^{\flat}V_{\text{vac}}\right)C' \\
&= -V_{\text{vac}}C'A' - \tilde{C}'\tilde{B}'C'.
\end{aligned}$$

Using our recursive expression for G_k, and continuing on from Eq. (D.8) we have

$$\begin{aligned}
H' =& V_{\text{vac}}C'A'^{k} - \tilde{C}'\tilde{A}'^{k-1}\tilde{B}'C' + G'_{k-1}A' \\
&= V_{\text{vac}}C'A'^{k} - \tilde{C}'\tilde{A}'^{k-1}\tilde{B}'C' - \tilde{C}'\tilde{A}'^{k-2}\tilde{B}'C'A' + G_{k-2}\tilde{A}'^{2} \\
&\vdots \qquad\qquad \vdots \qquad\qquad \vdots \qquad\qquad \vdots \\
&= V_{\text{vac}}C'A'^{k} - \sum_{j=1}^{k-1}\tilde{C}'\tilde{A}'^{j}\tilde{B}'C'A'^{k-1-j} + G_1A'^{k-1} \\
&= V_{\text{vac}}C'A'^{k} - \sum_{j=0}^{k-1}\tilde{C}'\tilde{A}'^{j}\tilde{B}'C'A'^{k-1-j} - V_{\text{vac}}C'A'^{k} \\
&= -\sum_{j=0}^{k-1}\tilde{C}'\tilde{A}'^{j}\tilde{B}'C'A'^{k-1-j}.
\end{aligned} \tag{D.9}$$

Furthermore, as $\tilde{C}'\tilde{A}'^{k-1}\tilde{B}' = \tilde{C}\tilde{A}^{k-1}\tilde{B}$ for all k and $C'A'^k = CA^kT_1^\flat$, then we may conclude that

$$H' = -\left(\sum_{j=0}^{k-1} \tilde{C}\tilde{A}^j\tilde{B}CA^{k-1-j}\right)T_1^\flat. \tag{D.10}$$

On the other hand, by using an identical argument to above,

$$H = -\sum_{j=0}^{k-1} \tilde{C}\tilde{A}^j\tilde{B}CA^{k-1-j}. \tag{D.11}$$

Therefore, using Eqs (D.10) and (D.11) in (D.7) completes the proof. □

D.3 Step (3)

To show that the system is doubled-up we use the observability of the quantum system. Observe that $C_1A_1^k$, $C_2A_2^k$ must be of the of this doubled up form for $k \in \{0, 1, 2, ...\}$. Writing $C_1A_1^k$, $C_2A_2^k$ and T_1 as $\begin{pmatrix} P_{(k)} & Q_{(k)} \\ Q_{(k)}^\# & P_{(k)}^\# \end{pmatrix}$, $\begin{pmatrix} P'_{(k)} & Q'_{(k)} \\ Q'^{\#}_{(k)} & P'^{\#}_{(k)} \end{pmatrix}$ and $T_1 = \begin{pmatrix} S_1 & S_2 \\ S_3 & S_4 \end{pmatrix}$, and using the result, $C_1A_1^k = C_2A_2^kT_1^\flat$, it follows that

$$P_{(k)}(S_1^\dagger - S_4^T) + Q_{(k)}(S_3^T - S_2^\dagger) = 0$$

$$Q_{(k)}^\#(S_1^\dagger - S_4^T) + P_{(k)}^\#(S_3^T - S_2^\dagger) = 0.$$

Hence

$$\mathcal{O}\begin{bmatrix} S_1^\dagger - S_4^T \\ S_3^T - S_2^\dagger \end{bmatrix} = 0$$

and by using the fact that $\mathcal{O}$ is full rank implies that

$$T_1 = \begin{pmatrix} S_1 & S_2 \\ S_2^\# & S_1^\# \end{pmatrix}.$$

Appendix E

Finding a Classical Realisation of the Power Spectrum

We assume that the matrix A for the n-mode minimal system, (A, C), possesses $2n$ distinct eigenvalues each with non-zero imaginary part. This requirement cis generic in the space of all quantum systems [15].

Firstly, observe that if λ_i is a complex eigenvalue of A with right eigenvector $\left(\begin{smallmatrix} R_i \\ S_i \end{smallmatrix}\right)$ and left eigenvector (U_i, V_i), then $\overline{\lambda}_i$ also an eigenvalue with right eigenvector $\left(\begin{smallmatrix} S_i \\ R_i \end{smallmatrix}\right)^{\#} = \Sigma\left(\begin{smallmatrix} R_i \\ S_i \end{smallmatrix}\right)^{\#}$ and left eigenvector $(V_i, U_i)^{\#} = (U_i, V_i)^{\#}\Sigma_n$, where $R_i, S_i \in \mathbb{C}^{1\times n}$, $U_i, V_i \in \mathbb{C}^{n\times 1}$ and $\Sigma_n := \left(\begin{smallmatrix} 0_n & 1_n \\ 1_n & 0_n \end{smallmatrix}\right)$. This property follows from the fact that A has the doubled-up form $A := \Delta\left(A_-, A_+\right)$. Furthermore, from the system (6.6) $\tilde{A}$ may be diagonalised as $\tilde{A} = P\tilde{A}_0 P^{-1}$ where

$$\tilde{A}_0 = \left(\begin{smallmatrix} -A_0^{\flat} & 0 \\ 0 & A_0 \end{smallmatrix}\right)$$

and A_0 is diagonal and doubled-up. Here P and P^{-1} are lower block triangular (Lemma 4) written as

$$P = \left(\begin{smallmatrix} P_1 & 0 \\ P_2 & P_3 \end{smallmatrix}\right) \quad \text{and} \quad P^{-1} = \left(\begin{smallmatrix} P_1^{-1} & 0 \\ -P_3^{-1}P_2P_1^{-1} & P_3^{-1} \end{smallmatrix}\right),$$

where

$$P_3 = \left(\begin{smallmatrix} R_1 & \dots & R_n & S_1 & \dots & S_n \\ S_1^{\#} & \dots & S_n^{\#} & R_1^{\#} & \dots & R_n^{\#} \end{smallmatrix}\right) \quad \text{and} \quad P_1^{-1} = \left(\begin{smallmatrix} U_1 & V_1 \\ \vdots & \vdots \\ U_n & V_n \\ V_1^{\#} & U_1^{\#} \\ \vdots & \vdots \\ V_n^{\#} & U_n^{\#} \end{smallmatrix}\right).$$

Hence, the power spectrum, $\Psi(s)J$, of the system in Eq. (6.6) may be written

$$V_{\text{vac}} - (-V_{\text{vac}}CP_1 + CP_2, CP_3) \begin{pmatrix} s+A_0^\flat & 0 \\ 0 & s-A_0 \end{pmatrix} \begin{pmatrix} P_1^{-1}C^\flat \\ -P_3^{-1}P_2P_1^{-1}C^\flat + P_3^{-1}C^\flat V_{\text{vac}} \end{pmatrix}. \tag{E.1}$$

We can construct a minimal realisation called *Gilbert's realisation* [49] by expanding as partial fractions:

$$\Psi(s)J = V_{\text{vac}} + \sum_{i=1}^{n} \frac{I_i}{(s+\overline{\lambda}_i)} + \frac{K_i}{(s+\lambda_i)} + \frac{T_i}{(s-\lambda_i)} + \frac{W_i}{(s-\overline{\lambda}_i)}, \tag{E.2}$$

with $\text{Re}(\lambda_i) < 0$. The matrices I_i, K_i, T_i, W_i are necessarily rank-one. Therefore there exist matrices $B_{1,i}, B_{2,i}, B'_{1,i}, B'_{2,i} \in \mathbb{C}^{1\times 2m}$ and $C_{1,i}, C_{2,i}, C'_{1,i}, C'_{2,i} \in \mathbb{C}^{2m\times 1}$ such that

$$C_{1,i}B_{1,i} = I_i, C'_{1,i}B'_{1,i} = K_i \quad \text{and} \quad C_{2,i}B_{2,i} = T_i, \quad C'_{2,i}B'_{2,i} = W_i$$

and are each uniquely determined from I_i, K_i, T_i, W_i up to a constant[1]. The Gilbert realisation $\tilde{A}_0, \tilde{B}_0, \tilde{C}_0$ is

$$\tilde{A}_0 := \text{Diag}\left(-\overline{\lambda}_1, ..., -\overline{\lambda}_n, -\lambda_1, ..., -\lambda_n, \lambda_1, ..., \lambda_n, \overline{\lambda}_1, ..., \overline{\lambda}_n\right),$$

$$\tilde{B}_0 := \begin{bmatrix} B_1 \\ B_2 \end{bmatrix}, \quad \tilde{C}_0 := [C_1, C_2]$$

where

$$B_1 := \begin{bmatrix} B_{1,1} \\ \vdots \\ B_{1,n} \\ B'_{1,1} \\ \vdots \\ B'_{1,n} \end{bmatrix} \quad B_2 := \begin{bmatrix} B_{2,1} \\ \vdots \\ B_{2,n} \\ B'_{1,1} \\ \vdots \\ B'_{1,n} \end{bmatrix},$$

$$C_1 := \begin{bmatrix} C_{1,1} & \dots & C_{1,n} & C'_{1,1} & \dots & C'_{1,n} \end{bmatrix},$$

$$C_2 := \begin{bmatrix} C_{2,1} & \dots & C_{2,n} & C'_{2,1} & \dots & C'_{2,n} \end{bmatrix}.$$

At the moment this Gilbert realisation doesn't satisfy the properties required by Sec. 6.5, i.e., B_1 and C_2 are not doubled-up. We can take care of this in the following way. Firstly, in this realisation I_i is equal to the ith column of $(-V_{\text{vac}}CP_1 + CP_2)$

[1] For example $\frac{1}{\nu}C_{1,i}$ and $\nu B_{1,i}$ are also solutions to I_i, where ν is a constant.

multiplied by the ith row of $P_1^{-1}C^\flat$ and K_i is equal to the $(n+i)^{\text{th}}$ column of $(-V_{\text{vac}}CP_1 + CP_2)$ multiplied by the $(n+i)^{\text{th}}$ row of $P_1^{-1}C^\flat$ (see Eq. (E.1)). Therefore, the ith row of B_1 differs from the ith row of the doubled-up matrix $P_1^{-1}C^\flat$ by an (unknown) multiplicative constant. Finally, by multiplying the rows of B_1 in our Gilbert realisation by suitable constants (and hence multiplying the corresponding columns of C_1 by the inverse of these constants so that the power spectrum remains unchanged) we can obtain a doubled-up B_1. A similar technique may be used to obtain a doubled-up C_2 by using the fact that CP_3 is doubled-up.

Appendix F

Proof of Theorem 14

In this section we prove Theorem 14.

Proof. Firstly, by Theorem 8, there exists a TFE basis whereby the system can be split into a series product of a system with a pure stationary state and one with a mixed (with the output) stationary state. Furthermore, we may assume that the pure and mixed component may be decomposed as a series of one-mode PQLSs by the results in Sec. 5.2. There are three cases to consider: (i) the system is globally minimal and the stationary state is fully mixed, (ii) pure component is a one mode PQLS or (iii) pure component is a two-mode PQLS and the power spectrum is trivial.

In this proof we are interested in cases (ii) and (iii). Firstly case(ii) is straightforward as it reduces to Lemma 5. Now for case (iii), let the first system in the cascade be (c, Ω_1) and the second be (d, Ω_2). For the power spectrum to be trivial it is required that

$$\Xi(-i\omega)N^T = N^T\Xi(-i\omega) \textbf{ and } \Xi(-i\omega)M = M\overline{\Xi(+i\omega)}.$$

Now, considering the poles of $\Xi(-i\omega)M = M\overline{\Xi(+i\omega)}$ we must have either:

(1) $\Omega_1 = -\Omega_2$ and $c^\dagger c = d^\dagger d$, or

(2) $\Omega_1 = -\Omega_2 = 0$, or

(3) $\Omega_1 \neq -\Omega_2$

<u>Case 1)</u>:

In this case the denominators of $\Xi(-i\omega)N^T = N^T\Xi(-i\omega)$ **and** $\Xi(-i\omega)M = M\overline{\Xi(+i\omega)}$ are equal, therefore we may equate their numerators. Expanding in powers of ω we obtain the following set of equations:

$$\left(cc^\dagger + dd^\dagger\right) N^T = N^T \left(cc^\dagger + dd^\dagger\right) \tag{F.1}$$

$$\begin{aligned}\left(i\Omega_1 + \frac{1}{2}c^\dagger c - cc^\dagger\right)\left(-i\Omega_1 + \frac{1}{2}d^\dagger d - dd^\dagger\right) N^T \\ = N^T \left(i\Omega_1 + \frac{1}{2}c^\dagger c - cc^\dagger\right)\left(-i\Omega_1 + \frac{1}{2}d^\dagger d - dd^\dagger\right)\end{aligned} \tag{F.2}$$

$$\left(cc^\dagger + dd^\dagger\right) M = M\overline{(cc^\dagger + dd^\dagger)} \tag{F.3}$$

$$\begin{aligned}\left(i\Omega_1 + \frac{1}{2}c^\dagger c - cc^\dagger\right)\left(-i\Omega_1 + \frac{1}{2}d^\dagger d - dd^\dagger\right) M \\ = M\left(-i\Omega_1 + \frac{1}{2}c^\dagger c - \overline{cc^\dagger}\right)\left(i\Omega_1 + \frac{1}{2}d^\dagger d - \overline{dd^\dagger}\right).\end{aligned} \tag{F.4}$$

The second equation here may be further split into real and imaginary parts. Using also the condition $c^\dagger c = d^\dagger d$ and the assumption $\Omega \neq 0$ we obtain the following pair of equations:

$$\left(cc^\dagger - dd^\dagger\right) N^T = N^T \left(cc^\dagger - dd^\dagger\right) \tag{F.5}$$

$$\left(cc^\dagger dd^\dagger - \frac{1}{2}c^\dagger cdd^\dagger - \frac{1}{2}d^\dagger dcc^\dagger\right) N^T = N^T \left(cc^\dagger dd^\dagger - \frac{1}{2}c^\dagger cdd^\dagger - \frac{1}{2}d^\dagger dcc^\dagger\right) \tag{F.6}$$

Similarly, the fourth equation may be split into symmetric and antisymmetric parts, i.e.,

$$\left(cc^\dagger - dd^\dagger\right) M = -M\overline{(cc^\dagger - dd^\dagger)} \tag{F.7}$$

$$\left(cc^\dagger dd^\dagger - \frac{1}{2}c^\dagger cdd^\dagger - \frac{1}{2}d^\dagger dcc^\dagger\right) M = M\overline{\left(cc^\dagger dd^\dagger - \frac{1}{2}c^\dagger cdd^\dagger - \frac{1}{2}d^\dagger dcc^\dagger\right)} \tag{F.8}$$

Therefore combing (F.1) (F.5) and (F.6) we obtain $cc^\dagger N^T = Ncc^\dagger$, $dd^\dagger N^T = N^T dd^\dagger$ and $cc^\dagger dd^\dagger N^T = N^T cc^\dagger dd^\dagger$. Further, combining (F.3) (F.7) and (F.8) we obtain $cc^\dagger M = M\overline{dd^\dagger}$, and $cc^\dagger dd^\dagger M = M\overline{cc^\dagger dd^\dagger}$. Hence we obtain conditions (3) in the Theorem.

Case 2)

The result is equations (F.1) (F.6) (F.3) and (F.8). Hence we obtain conditions (4) in the Theorem.

Case 3)

Because the poles are different in $\Xi(-i\omega)M = M\overline{\Xi(+i\omega)}$ then it must be the case that we have two one-mode cancellations as in Lemma (5). That is, $\Xi_i(-i\omega)N^T\Xi_i(-i\omega)^\dagger = N^T$ **and** $\Xi_i(-i\omega)M\Xi_i(-i\omega)^T = M$ for systems $i = 1, 2$. This gives either conditions (1) or conditions (2) in the Theorem. □

Appendix G

Supplementary Proof for Sec. 6.10

We show here that non-observability of the cascaded system (6.34) implies that the original system is non-globally minimal for the case of distinct eigenvalues. Recall from Sec. 6.10 that non-observability implies that there exists an eigenvalue-eigenvector pair λ, y of $A^\dagger$, i.e., $A^\dagger y = \lambda y$ such that Cy is also an eigenvector of the input N.

Now, list all the left and right eigenvectors of A as L_i and R_i respectively. Therefore we can write $\Upsilon(-i\omega)$ as

$$\Upsilon(-i\omega) = \left(1 - \sum_i \frac{(CR_i)(L_iC^\dagger)}{-i\omega - \lambda_i}\right) N \left(1 - \sum_i \frac{(CL_i^\dagger)(R_i^\dagger C^\dagger)}{i\omega - \overline{\lambda}_i}\right)$$

Now, suppose that the cascaded system (6.34) is non-observable as per the assumption above. This means that $CL_i^\dagger$ is an eigenvector of N for some i. Suppose that this is true for $i = k$. It follows fairly straightforwardly by using the unitarity of the transfer function that

$$\Upsilon(-i\omega) = \left(1 - \sum_{i\neq k} \frac{(CR_i)(L_iC^\dagger)}{-i\omega - \lambda_i}\right) N \left(1 - \sum_{i\neq k} \frac{(CL_i^\dagger)(R_i^\dagger C^\dagger)}{i\omega - \overline{\lambda}_i}\right).$$

Moreover, the function $\left(1 - \sum_{i\neq k} \frac{(CR_i)(L_iC^\dagger)}{-i\omega-\lambda_i}\right)$ must also be unitary. Hence by [74] there exist a physical QLS with this transfer function. Crucially, this system has one less mode than the original system, which implies that the original PQLS cannot be globally minimal.

Appendix H

Proof of Theorem 18

Before proving this theorem we discuss a little theory.

The operators $\mathbf{B}_i(t)$ introduced in Sec. 3.2 are the quantum analogue of 'classical' Wiener process and can be used to define *quantum stochastic integrals*, such as

$$\mathbf{I}(t) = \int_0^t d\mathbf{B}^\dagger(s)\mathbf{M}(s) + \mathbf{N}^\dagger(s)d\mathbf{B}(s) + \mathbf{P}(s)ds$$

[9, 10, 42], where $\mathbf{M}(s), \mathbf{N}(s), \mathbf{P}(s)$ are time-adaptive operators. When multiplying stochastic integrals, $\mathbf{I}_1(t)$ and $\mathbf{I}_2(t)$, the product is a stochastic integral with increment

$$d\left(\mathbf{I}_1(t)\mathbf{I}_2(t)\right) = d\mathbf{I}_1(t)\cdot\mathbf{I}_2(t) + \mathbf{I}_1(t)\cdot d\mathbf{I}_2(t) + d\mathbf{I}_1(t)\cdot d\mathbf{I}_2(t).$$

Notice the extra *Ito correction* term, which is not present in ordinary calculus. The Ito term can be calculated by using the Ito rules [63]:

$\times$	$d\mathbf{A}_k$	$d\mathbf{A}_k^*$
$d\mathbf{A}_i$	$(\delta_{ik} + N_{ki})dt$	$M_{ik}dt$
$d\mathbf{A}_j^*$	$\overline{M}_{ki}dt$	$N_{ik}dt$

Notice that the Ito rules depends on the input $V(N, M)$.

Proof of Theorem 18. The evolution of the system and field is described by the unitary $\mathbf{U}_\theta(t)$, which satisfies the QSDE

$$d\mathbf{U}_\theta(t) = \left(\sum_{i=1}^{m} \mathbf{L}_i d\mathbf{B}_i^*(t) - \mathbf{L}_i^* d\mathbf{B}_i(t) - (\mathbf{K} + i\mathbf{H})dt\right) U_\theta(t), \tag{H.1}$$

where $\mathbf{K} = \frac{1}{2}\left(\mathbf{L}^{\#}, \mathbf{L}^T\right) JV(N,M)J\left(\mathbf{L}^T, \mathbf{L}^\dagger\right) = \frac{1}{2}\tilde{\mathbf{L}}^\dagger\tilde{\mathbf{L}}$ for modified coupling operator given in the theorem. Note that these modified coupling operators in $\mathbf{K}$ are the only difference between Eqs. (H.1) and (3.8) (the unmodified ones, as in Eq. (3.8) correspond to the case of vacuum input).

Now by considering the generator $\mathbf{G}_\theta(t) := \mathbf{U}_\theta^*(t)\dot{\mathbf{U}}_\theta(t)$, the QFI, F_θ, in Eq. (4.4) may be written as (we drop the subscript θ here)

$$F_\theta = 4\mathrm{Re}\left(\langle\phi\otimes\xi|\mathbf{G}^*(t)\mathbf{G}(t)|\phi\otimes\xi\rangle - \langle\phi\otimes\xi|\mathbf{G}^*(t)|\phi\otimes\xi\rangle\langle\phi\otimes\xi|\mathbf{G}(t)|\phi\otimes\xi\rangle\right).$$

The method we take is to show that the generator can be written as a QSDE, from which it may be solved. From the QSDE (H.1) we have

$$\begin{aligned}
d\mathbf{U}^*(t) &= \mathbf{U}^*(t)\left(\sum_{i=1}^{m} \mathbf{L}_i^* d\mathbf{B}_i(t) - \mathbf{L}_i d\mathbf{B}_i^*(t) - (\mathbf{K} - i\mathbf{H})dt\right),\\
d\dot{\mathbf{U}}(t) &= \left(\sum_{i=1}^{m} \mathbf{L}_i d\mathbf{B}_i^*(t) - \mathbf{L}_i^* d\mathbf{B}_i(t) - (\mathbf{K} + i\mathbf{H})dt\right)\dot{\mathbf{U}}(t)\\
&\quad + \left(\sum_{i=1}^{m} \dot{\mathbf{L}}_i d\mathbf{B}_i^*(t) - \dot{\mathbf{L}}_i^* d\mathbf{B}_i(t) - (\dot{\mathbf{K}} + i\dot{\mathbf{H}})dt\right)\mathbf{U}(t).
\end{aligned}$$

Hence by applying the Ito rules we obtain (dropping the subscript θ)

$$
\begin{aligned}
d\mathbf{G}(t) &= (d\mathbf{U}^*(t))\,\dot{\mathbf{U}}(t) + \mathbf{U}^*(t)\left(d\dot{\mathbf{U}}(t)\right) + (d\mathbf{U}^*(t))\left(d\dot{\mathbf{U}}(t)\right) \\
&= \sum_{i=1}^{m}\left(j_t(\dot{\mathbf{L}}_i)d\mathbf{B}_i^*(t) - j_t(\dot{\mathbf{L}}_i^*)d\mathbf{B}_i(t)\right) \\
&+ \mathbf{U}^*(t)\left(-2\mathbf{K}dt + \left[\sum_{i=1}^{m}\mathbf{L}_i^* d\mathbf{B}_i(t) - \mathbf{L}_i d\mathbf{B}_i^*(t)\right]\left[\sum_{i=1}^{m}\mathbf{L}_i d\mathbf{B}_i^*(t) - \mathbf{L}_i^* d\mathbf{B}_i(t)\right]\right)\dot{\mathbf{U}}(t) \\
&+ j_t\left(-(\dot{\mathbf{K}} + i\dot{\mathbf{H}}) + \left[\sum_{i=1}^{m}\mathbf{L}_i^* d\mathbf{B}_i(t) - \mathbf{L}_i d\mathbf{B}_i^*(t)\right]\left[\sum_{i=1}^{m}\dot{\mathbf{L}}_i d\mathbf{B}_i^*(t) - \dot{\mathbf{L}}_i^* d\mathbf{B}_i(t)\right]\right)dt
\end{aligned}
$$

As $\mathbf{K} = \frac{1}{2}\tilde{\mathbf{L}}^\dagger\tilde{\mathbf{L}}$, the second term above is zero and so we may write

$$
d\mathbf{G}(t) = \sum_{i=1}^{m}\left(j_t(\dot{\mathbf{L}}_i)d\mathbf{B}_i^*(t) - j_t(\dot{\mathbf{L}}_i^*)d\mathbf{B}_i(t)\right) - ij_t(\mathbf{R})dt,
$$

where the operator $\mathbf{R}$ is given by

$$
\mathbf{R} = \dot{\mathbf{H}} + \mathrm{Im}\sum_{i=1}^{m}\dot{\tilde{\mathbf{L}}}_i^\dagger\tilde{\mathbf{L}}_i. \tag{H.2}
$$

In the following we work with the centred generator, $\mathbf{G}_0(t)$, given by

$$
d\mathbf{G}_0(t) = \sum_{i=1}^{m}\left(j_t(\dot{\mathbf{L}}_i)d\mathbf{B}_i^*(t) - j_t(\dot{\mathbf{L}}_i^*)d\mathbf{B}_i(t)\right) - ij_t(\mathbf{R}_0)dt,
$$

where $\mathbf{R}_0 := \mathbf{R} - \langle\mathbf{R}\rangle_{\rho_{ss}}\mathbb{1}$, so that (by ergodicity) its rescaled mean converges to zero, i.e.,

$$
\lim_{t\to\infty}\frac{1}{t}\langle\phi\otimes\xi|\mathbf{G}_0(t)|\phi\otimes\xi\rangle = 0.
$$

Such centred operators are examples of a more general class of operators, called output *fluctuation operators* (see [42]). Now, using this fluctuation operator the QFI scales linearly with t by ergodicity and the leading contribution is given by the

quantum Fisher-information rate

$$f_\theta := \lim_{t\to\infty} \frac{F_\theta}{t} = \lim_{t\to\infty} \frac{1}{t} 4\mathrm{Re}\, \langle \phi \otimes \xi | \mathbf{G}_0^*(t)\mathbf{G}_0(t) | \phi \otimes \xi \rangle \,.$$

For notational convenience, we absorb a factor of $t^{-1/2}$ into $\mathbf{G}_0$, so that the rate is given by

$$f_\theta = \lim_{t\to\infty} 4\mathrm{Re} \int_0^t \langle \phi \otimes \xi | d\left(\mathbf{G}_0^*(s)\mathbf{G}_0(s)\right) | \phi \otimes \xi \rangle$$

for fluctuation operator

$$\mathbf{G}_0(t) = \frac{1}{\sqrt{t}} \int_0^t \left(\sum_{i=1}^m \left(j_t(\dot{\mathbf{L}}_i) d\mathbf{B}_i^*(s) - j_t(\dot{\mathbf{L}}_i^*) d\mathbf{B}_i(s) \right) - i j_t(\mathbf{R}_0) ds \right).$$

We will now calculate the rate. Firstly, the differential $d\left(\mathbf{G}_0^*(s)\mathbf{G}_0(s)\right)$ can be written

$$d\left(\mathbf{G}_0^*(s)\mathbf{G}_0(s)\right) = \mathbf{G}_0^*(s) \cdot d\mathbf{G}_0(s) + d\mathbf{G}_0^*(s) \cdot \mathbf{G}_0(s) + d\mathbf{G}_0^*(s) \cdot d\mathbf{G}_0(s). \tag{H.3}$$

Let us calculate these terms in turn. For the last term

$$\begin{aligned}
&\int_0^t \langle \phi \otimes \xi | d\mathbf{G}_0^*(s) \cdot d\mathbf{G}_0(s) | \phi \otimes \xi \rangle \\
&= \frac{1}{t} \int_0^t \langle \phi \otimes \xi | \left[\sum_{i=1}^m j_s(\dot{\mathbf{L}}_i^*) d\mathbf{B}_i(s) - j_s(\dot{\mathbf{L}}_i) d\mathbf{B}_i^*(s) \right] \left[\sum_{i=1}^m j_s(\dot{\mathbf{L}}_i) d\mathbf{B}_i^*(s) - j_s(\dot{\mathbf{L}}_i^*) d\mathbf{B}_i(s) \right] | \phi \otimes \xi \rangle \qquad \text{(H.4)} \\
&= \frac{1}{t} \int_0^t \langle \phi | T_s \left(\dot{\tilde{\mathbf{L}}}^\dagger \dot{\tilde{\mathbf{L}}} \right) | \phi \rangle \overset{t\to\infty}{\longrightarrow} \left\langle \dot{\tilde{\mathbf{L}}}^\dagger \dot{\tilde{\mathbf{L}}} \right\rangle_{\rho_{ss}} . \qquad \text{(H.5)}
\end{aligned}$$

The remaining two terms in Eq. (H.3) are slightly more involved and require the following Lemma.

Lemma 7.

$$\sqrt{s}\, \langle \xi | \mathbf{G}^*(s) j_s(-i\mathbf{R}_0) | \xi \rangle = \int_0^s T_r \circ \Upsilon \circ T_{s-r}(-i\mathbf{R}_0) dr, \tag{H.6}$$

where $\Upsilon(\mathbf{X}) = i\mathbf{R}_0\mathbf{X} + \sum_{i=1}^{m} \dot{\tilde{\mathbf{L}}}_i^\dagger \left[\mathbf{X}, \tilde{\mathbf{L}}_i\right]$.

Proof. Label the LHS of Eq. (H.6) as $K_s(-i\mathbf{R}_0)_s$ then by using the Ito rules we have

$$
\begin{aligned}
dK_s(-i\mathbf{R}_0) &= \langle\xi|\mathbf{G}^*(s)dj_s(-i\mathbf{R}_0)|\xi\rangle + \langle\xi|j_s(i\mathbf{R}_0)^* j_s(-i\mathbf{R}_0)|\xi\rangle\, ds \\
&- i\,\langle\xi|\left[\sum_{i=1}^{m} j_s(\dot{\mathbf{L}}_i^*)d\mathbf{B}_i(s) - j_s(\dot{\mathbf{L}}_i)d\mathbf{B}_i^*(s)\right]\left[\sum_{i=1}^{m} j_s([\mathbf{R}_0,\mathbf{L}_i])d\mathbf{B}_i^*(s) - j_s([\mathbf{R}_0,\mathbf{L}_i^*])d\mathbf{B}_i(s)\right]\xi\rangle \\
&= \langle\xi|\mathbf{G}^*(s)dj_s(-i\mathbf{R}_0)|\xi\rangle + \langle\xi|j_s(i\mathbf{R}_0)^* j_s(-i\mathbf{R}_0)|\xi\rangle\, ds \\
&- i\,\langle\xi|\sum_{i=1}^{m} j_s(\dot{\tilde{\mathbf{L}}}_i^*[\mathbf{R}_0,\tilde{\mathbf{L}}_i])\xi\rangle\, ds \\
&= \left[K_s\circ\tilde{\mathcal{L}}(-i\mathbf{R}_0) + T_s\circ\Upsilon(-i\mathbf{R}_0)\right] ds,
\end{aligned}
$$

where $\tilde{\mathcal{L}}(\mathbf{X})$ is the (modified) Lindblad generator. Finally, this first order differential solution can be verified to have solution as stated in the lemma. □

Following this result we are now able to calculate the expectations of the first and second terms in Eq. (H.3). Thus

$$
\begin{aligned}
\int_0^t \langle\phi\otimes\xi|\mathbf{G}^*(s)d\mathbf{G}(s)|\phi\otimes\xi\rangle &= \frac{1}{t}\int_0^t ds\,\langle\phi|\left(\int_0^s T_r\circ\Upsilon\circ T_{s-r}(-i\mathbf{R}_0)dr\right)|\phi\rangle \\
&= \int_0^t ds\,\langle\phi|\frac{1}{t}\left(\int_0^{t-s}\mathrm{d}r T_r\right)\circ\Upsilon\circ T_s(-i\mathbf{R}_0)|\phi\rangle \\
&\xrightarrow{t\to\infty} -i\,\langle\Upsilon\circ\mathbf{W}\rangle_{\rho_{ss}}\,. \qquad \text{(H.7)}
\end{aligned}
$$

A similar result holds for the second term, so that we have

$$
\begin{aligned}
f_\theta = \Bigg\langle &\dot{\tilde{\mathbf{L}}}^\dagger\dot{\tilde{\mathbf{L}}} - i\sum_i \dot{\tilde{\mathbf{L}}}_i[\tilde{\mathbf{L}}_i,\mathbf{W}] \\
&+ i\left(\sum_i \dot{\tilde{\mathbf{L}}}_i[\tilde{\mathbf{L}}_i,\mathbf{W}]\right)^\dagger + \mathbf{W}\mathbf{R}_0 + \mathbf{R}_0\mathbf{W}\Bigg\rangle.
\end{aligned}
$$

The first 3 terms are consistent with the statement (6.36) in the Theorem. Hence to complete the proof it remains to show that

$$\mathbf{W}\mathbf{R}_0 + \mathbf{R}_0\mathbf{W} = \Big([\tilde{\mathbf{L}}_i, \mathbf{W}]\Big)^{\dagger} [\tilde{\mathbf{L}}_i, \mathbf{W}],$$

which can be seen in [42, pg. 25]. □

Appendix I

Using Frequency-Entangled States to Improve Estimation

In this section we show that there is only a small advantage to be had in terms of estimation precision by using frequency-entangled states for one parameter models of a fixed photon input. It is illustrated in the form of an example that this advantage is difficult to exploit in practice.

Let us consider a SISO PQLS to begin with. As we have seen above, the optimal QFI for fixed photon input states of one frequency is given by

$$F(\theta) = N^2 \cdot \sup_{\omega} \left\| \frac{d\Xi_\theta(-i\omega)}{d\theta} \right\|^2 . \tag{I.1}$$

Now, suppose we are to generalise our class of probe states by allowing for N-photon inputs spread over d frequencies. Denote our d-frequency entangled state as $|\psi\rangle$. Since we are dealing with linear systems, each frequency evolves independently, so that the action of the PQLS on $|\psi\rangle$ is given by

$$|\psi\rangle \mapsto \Xi_\theta(-i\omega_1) \otimes \Xi_\theta(-i\omega_2) \otimes ... \otimes \Xi_\theta(-i\omega_d) \, |\psi\rangle \, .$$

Hence the QFI is given by

$$F(\theta) = 4\mathrm{Var}\left(\frac{d\Xi_\theta(-i\omega_1)}{d\theta} \mathbf{a}^\dagger(\omega_1)\mathbf{a}(\omega_1) + \ldots + \frac{d\Xi_\theta(-i\omega_d)}{d\theta} \mathbf{a}^\dagger(\omega_d)\mathbf{a}(\omega_d) \right) .$$

Now, the maximum of this variance corresponds to a $|\psi\rangle$ which is an equally weighted

superposition of eigenvectors, whose eigenvalues are the maximum and minimum of this generator. These eigenvalues are given by $N \times \lambda_{max}$ and $N \times \lambda_{min}$ where $\lambda_{max} = \max\left\{\max_i \frac{d\Xi(-i\omega_i)}{d\theta}, 0\right\}$ and $\lambda_{min} = \min\left\{\min_i \frac{d\Xi(-i\omega_i)}{d\theta}, 0\right\}$. There are two cases to consider:

(1) If $\frac{d\Xi_\theta(-i\omega)}{d\theta}$ has the same sign for all ω, then the largest and smallest eigenvalues are given by 0 and $\max_i \frac{d\Xi_\theta(-i\omega_i)}{d\theta} \times N$. To optimise over all probe states, one must select as one of the probe frequencies $\omega_{opt} = \arg\sup_\omega \left\|\frac{d\Xi_\theta(-i\omega)}{d\theta}\right\|^2$. In this case, a single frequency probe, and in particular the cat-state, is optimal as it has the required eigenvalues.

(2) If $\frac{d\Xi_\theta(-i\omega)}{d\theta}$ has differing sign then it is possible to obtain a factor of 4 improvement in the QFI by using frequency-entangled states. To see this, let $\omega_{sup} = \arg\sup_\omega \frac{d\Xi_\theta(-i\omega)}{d\theta}$ and $\omega_{inf} = \arg\inf_\omega \frac{d\Xi_\theta(-i\omega)}{d\theta}$ then the optimal probe state is seen to be given by

$$|\psi\rangle = \frac{1}{\sqrt{2}}\left(|0, N(\omega_{sup})\rangle + |0, N(\omega_{inf})\rangle\right)$$

and in which case the QFI is

$$F(\theta) = N^2 \left(\left.\frac{d\Xi_\theta(-i\omega)}{d\theta}\right|_{\omega_{sup}} - \left.\frac{d\Xi_\theta(-i\omega)}{d\theta}\right|_{\omega_{inf}} \right)^2 .$$

Now if $\left.\frac{d\Xi_\theta(-i\omega)}{d\theta}\right|_{\omega_{sup}} = -\left.\frac{d\Xi_\theta(-i\omega)}{d\theta}\right|_{\omega_{inf}}$ then the QFI here is four times larger than the best single frequency input state.

In conclusion it is possible to get (up to) a factor of 4 improvement in estimation precision for a fixed photon input to a SISO PQLS by using two-frequency-entangled inputs. However, this improvement is intrinsically dependent on the system and on the unknown parameter. For example, the requirement that $\left.\frac{d\Xi_\theta(-i\omega)}{d\theta}\right|_{\omega_{sup}} = -\left.\frac{d\Xi_\theta(-i\omega)}{d\theta}\right|_{\omega_{inf}}$ is highly restrictive and so this factor of 4 improvement should be correctly interpreted as an upper bound that may in general not be achievable for a given system and unknown parameter.

Example 23. *To see an example where this condition does hold, consider a SISO PQLS with one internal mode* $(n = 1)$ *characterised by* $(C = c, \Omega = a)$ *and assume that* c *is unknown and* a *is known. We may write the phase in the transfer function as* $\lambda = 2\arctan\left(\frac{-2\omega+2a}{c^2}\right) - \pi$. *It follows that* $\frac{d\lambda}{dc} = \frac{4(-\omega+a)c}{c^4+4(-\omega+a)^2}$. *Maximising this over frequency we find the single frequency N00N state with the largest QFI will have frequency* $\omega_{opt} = a \pm c^2/2$. *In which case* $\frac{d\lambda}{dc}|_{\omega=\omega_{opt}} = \mp\frac{1}{c}$. *Assuming that* $|a \pm c^2/2| \geq 0$ *(so that the following frequency choices are physical), then an input state entangled over these two frequency choices would be four times more informative than the best monochromatic probe. However, note that estimating the other parameter in this system would not satisfy this condition.*

For MIMO PQLSs the result is similar, except for a slight subtlety due to the possibility of mode-entanglement in addition to frequency-entanglement. We don't discuss this further here.

Practically, since our search is for realistic metrology methods for PQLSs, the cost or complexity involved in the creation of these highly-frequency-entangled states far outweigh the benefit in terms of enhanced precision for one parameter systems (note that this is not the case for multi-parameters). Coupled with the fact that the advantage of using them may only be seen for 'special' PQLSs leads us to neglect these types of states from our considerations for one-parameter models.

Appendix J

Adaptive Procedure for Feedback Method 2 (MIMO PQLSs)

Split the time into three and obtain a rough estimate for θ with MSE $\mathcal{O}\left(\frac{1}{T_{\text{tot}}}\right)$ in step 1. In step 2 choose $\hat{c}_{i,n}$ and Ω_{jn}, so that the direct and indirect couplings in (8.18) and (8.19) are of the order $\mathcal{O}\left(\frac{1}{T_{\text{Tot}}^{1/4}}\right)$ (in a similar way to the SISO case). Considering the transfer function of the resultant system given by (8.5), this entails that all matrix elements of $\frac{d\Xi_\theta}{d\theta}(-i\hat{\omega})$ are of order $\mathcal{O}\left(\sqrt{T_{\text{tot}}}\right)$, where $\hat{\omega}$ is the estimator of Ω_2 in Eq. 8.5, which has MSE $\mathcal{O}\left(\frac{1}{T_{\text{tot}}}\right)$ from step 1 (see remark 13). To see this, firstly write $c_i = [c_{1,i}, ..., c_{mi}]^T$ and $\delta_1 = [\delta_{1,1}, ..., \delta_{mi}]^T$, then the (i,j)-component of the matrix $C\left(-i\omega + i\Omega + \frac{1}{2}C^\dagger C\right)^{-1} C^\dagger$ may be written as

$$\frac{\text{Det}\left(-i\omega + i\Omega + \frac{1}{2}C^\dagger C - \begin{bmatrix} \bar{c}_{j1} \\ \vdots \\ \bar{c}_{j,n-1} \\ \bar{\delta}_{j,1} \end{bmatrix} \begin{bmatrix} c_{i1} & \dots & c_{i,n-1} & \delta_{i,1} \end{bmatrix}\right)}{\text{Det}\left(-i\omega + i\Omega + \frac{1}{2}C^\dagger C\right)} - 1 \tag{J.1}$$

using standard matrix results. Now $\text{Det}\left(-i\hat{\omega} + i\Omega + \frac{1}{2}C^\dagger C\right) = \mathcal{O}\left(\frac{1}{\sqrt{T_{\text{tot}}}}\right)$ using (8.15). Similarly the term in the numerator of (J.1) is also of order $\mathcal{O}\left(\frac{1}{\sqrt{T_{\text{tot}}}}\right)$, which

can be seen by writing it as

$$\left(-i\omega + i\Omega_2 \pm \frac{1}{2}\delta_1^\dagger\delta_1 - \overline{\delta}_{j1}\delta_{i1}\right)\mathrm{Det}\left(-i\omega + i\Omega_1 \pm \frac{1}{2}c^\dagger c - \begin{bmatrix} \overline{c}_{j1} \\ \vdots \\ \overline{c}_{j,n-1} \end{bmatrix}\begin{bmatrix} c_{i1} & \cdots & c_{i,n-1} \end{bmatrix} - \frac{\left(i\delta_2 \pm \frac{1}{2}c^\dagger\delta_1 - \begin{bmatrix} \overline{c}_{j1} \\ \vdots \\ \overline{c}_{j,n-1} \end{bmatrix}\delta_{i1}\right)\left(i\delta_2^\dagger \pm \frac{1}{2}\delta_1^\dagger c - \overline{\delta}_{j1}\begin{bmatrix} c_{i1} & \cdots & c_{i,n-1} \end{bmatrix}\right)}{-i\omega + i\Omega_2 \pm \frac{1}{2}\delta_1^\dagger\delta_1 - \overline{\delta}_{j1}\delta_{i1}}\right).$$

Hence, by using the quotient rule, each element of $\frac{d\Xi_\theta}{d\theta}(-i\Omega_2)$ is of order $\sqrt{T_{\mathrm{tot}}}$. Finally, we have

$$\left|\left|\frac{d\Xi_\theta}{d\theta}(-i\Omega_2)\right|\right|^2 = \mathcal{O}\left(T_{\mathrm{tot}}\right) \tag{J.2}$$

(spectral norm), as in the SISO case.

Remark 20. *In the MIMO case the optimal coherent input is the one with amplitude given by the largest eigenvector of* $\frac{d\Xi_\theta}{d\theta}(-i\Omega_2)$ *[5]. However this optimisation is not important as we are primarily interested in the scaling with time (this optimisation will only improve the precision by a constant factor) and so any vector will suffice.*

Remark 21. *Notice that we have more control parameters than we actually require. One could of course optimise over these but for simplicity we have set them all to be zero (*$d_{jk} = 0$ *for* $2 \leq j \leq m, 1 \leq k \leq n-1$*).*

Appendix K

A QFI Proof for Coherent States

We now prove that for a coherent state, with amplitude $\alpha(\theta) \in \mathbb{R}$, the QFI is given by

$$F(\theta) = 4\left|\frac{d\alpha(\theta)}{d\theta}\right|^2.$$

Firstly, write the coherent state as $|\alpha(\theta)\rangle = \left(e^{-\frac{|\alpha(\theta)|^2}{2}} e^{\alpha(\theta)\mathbf{a}^\dagger}\right)|0\rangle$ it follows that

$$\frac{d}{d\theta}|\alpha(\theta)\rangle = \left(\frac{d\alpha(\theta)}{d\theta}\mathbf{a}^\dagger - |\alpha(\theta)|\frac{d|\alpha(\theta)|^2}{d\theta}\right)|\alpha(\theta)\rangle.$$

Therefore,

$$\langle\alpha(\theta)|\alpha(\theta)'\rangle = \overline{\alpha(\theta)}\frac{d\alpha(\theta)}{d\theta} - |\alpha(\theta)|\frac{d|\alpha(\theta)|}{d\theta}$$

and

$$\begin{aligned}\langle\alpha(\theta)'|\alpha(\theta)'\rangle = &\left(|\alpha|\frac{d|\alpha(\theta)|}{d\theta}\right)^2 + (1+|\alpha(\theta)|^2)\left|\frac{d\alpha(\theta)}{d\theta}\right|^2 \\ &- |\alpha(\theta)|\frac{d|\alpha(\theta)|}{d\theta}\left(\alpha(\theta)\frac{d\overline{\alpha(\theta)}}{d\theta} + \overline{\alpha(\theta)}\frac{d\alpha(\theta)}{d\theta}\right).\end{aligned}$$

Finally, the result follows immediately from Eq. (4.4).

Bibliography

[1] Matthew Levitt and Mădălin Guţă. "Identification of single-input–single-output quantum linear systems". In: *PRA* 95.3 (2017), p. 033825.

[2] Matthew Levitt, Madalin Guta, and Hendra I Nurdin. "Power Spectrum Identification for Quantum Linear Systems". In: *arXiv: 1612.02681* (2016).

[3] Michael A Nielsen and Isaac L Chuang. *Quantum computation and quantum Information*. Cambridge University Press, 2010.

[4] Jonathan P Dowling and Gerard J Milburn. "Quantum technology: the second quantum revolution". In: *Phil. Trans. R. Soc. A* 361.1809 (2003).

[5] Mădălin Guţă and Naoki Yamamoto. "System identification for passive linear quantum systems". In: *IEEE Trans. Autom. Control.* 61.4 (2016), pp. 921–936.

[6] Rafal Demkowicz-Dobrzanski, Jan Kolodynski, and Madalin Guta. "The elusive Heisenberg limit in quantum enhanced metrology". In: *arXiv:1201.3940* (2012).

[7] Daoyi Dong and Ian R Petersen. "Quantum control theory and applications: a survey". In: *IET Control Theory & Applications* 4.12 (2010), pp. 2651–2671.

[8] Howard M Wiseman and Gerard J Milburn. *Quantum measurement and control*. Cambridge University Press, 2009.

[9] Luc Bouten. "Filtering and control in quantum optics". In: *arXiv: 041.0080* (2004).

[10] Luc Bouten, Ramon Van Handel, and Matthew R James. "An introduction to quantum filtering". In: *SIAM J. Control Optim.* 46.6 (2007), pp. 2199–2241.

[11] John E Gough, MR James, and HI Nurdin. "Squeezing components in linear quantum feedback networks". In: *PRA* 81.2 (2010), p. 023804.

[12] Ram Somaraju and Ian R Petersen. "Lyapunov stability for quantum Markov processes". In: *American Control Conference*. IEEE. 2009, pp. 719–724.

[13] Ian R Petersen. "Quantum linear systems theory". In: *arXiv: 1603.04950* (2016).

[14] Matthew R James, Hendra I Nurdin, and Ian R Petersen. "Control of linear quantum stochastic systems". In: *IEEE Trans. Autom. Control.* 53.8 (2008), pp. 1787–1803.

[15] Hendra I Nurdin, Symeon Grivopoulos, and Ian R Petersen. "The transfer function of generic linear quantum stochastic systems has a pure cascade realization". In: *Automatica* 69 (2016), pp. 324–333.

[16] Symeon Grivopoulos and Ian Petersen. "A new realization method for linear quantum stochastic systems". In: *arXiv:1511.04516* (2015).

[17] John E Gough and Guofeng Zhang. "On realization theory of quantum linear systems". In: *Automatica* 59 (2015), pp. 139–151.

[18] Ram Somaraju and Ian Petersen. "Feedback interconnection of open quantum systems: A small gain theorem". In: *IEEE, Decision and Control, 2009 conference.* IEEE. 2009, pp. 2474–2479.

[19] Andrew C Doherty and Kurt Jacobs. "Feedback control of quantum systems using continuous state estimation". In: *PRA* 60.4 (1999), p. 2700.

[20] Masahiro Yanagisawa and Hidenori Kimura. "Transfer function approach to quantum control-part I: Dynamics of quantum feedback systems". In: *IEEE Trans. Autom. Control.* 48.12 (2003), pp. 2107–2120.

[21] John Gough, Rolf Gohm, and Masahiro Yanagisawa. "Linear quantum feedback networks". In: *PRA* 78.6 (2008), p. 062104.

[22] John Gough and Matthew R James. "The series product and its application to quantum feedforward and feedback networks". In: *IEEE Trans. Auto. Control* 54.11 (2009), pp. 2530–2544.

[23] John Gough. "Feedback network models for quantum transport". In: *PRE* 90.6 (2014), p. 062109.

[24] GuoFeng Zhang and Matthew R James. "Quantum feedback networks and control: a brief survey". In: *Chinese Sci. Bull.* 57.18 (2012), pp. 2200–2214.

[25] Hendra I Nurdin, Matthew R James, and Andrew C Doherty. "Network synthesis of linear dynamical quantum stochastic systems". In: *SIAM J. Control and Optim.* 48.4 (2009), pp. 2686–2718.

[26] Kei Koga and Naoki Yamamoto. "Dissipation-induced pure Gaussian state". In: *PRA* 85.2 (2012), p. 022103.

[27] Daniel F Walls and Gerard J Milburn. *Quantum optics*. Springer Science & Business Media, 2007.

[28] Lin Tian. "Adiabatic state conversion and pulse transmission in optomechanical systems". In: *PRL* 108.15 (2012), p. 153604.

[29] Crispin Gardiner and Peter Zoller. *Quantum noise: a handbook of Markovian and non-Markovian quantum stochastic methods with applications to quantum optics*. Vol. 56. Springer Science & Business Media, 2004.

[30] John K Stockton, Ramon van Handel, and Hideo Mabuchi. "Deterministic Dicke-state preparation with continuous measurement and control". In: *PRA* 70.2 (2004), p. 022106.

[31] Alpár Mátyás et al. "Linear circuit models for on-chip quantum electrodynamics". In: *IEEE Trans. Microw.* 59.1 (2011), pp. 65–71.

[32] Naoki Yamamoto. "Decoherence-free linear quantum subsystems". In: *IEEE Trans. Autom. Control.* 59.7 (2014), pp. 1845–1857.

[33] Hendra I Nurdin and John E Gough. "Modular quantum memories using passive linear optics and coherent feedback". In: *arXiv: 1409.7473* (2014).

[34] Matthew R James, Hendra I Nurdin, and Ian R Petersen. "H^∞ Control of Linear Quantum Stochastic Systems". In: *IEEE Trans. Autom. Control* 53.8 (2008), pp. 1787–1803.

[35] Hendra I Nurdin, Matthew R James, and Ian R Petersen. "Coherent quantum LQG control". In: *Automatica* 45.8 (2009), pp. 1837–1846.

[36] Naoki Yamamoto and Matthew R James. "Zero-dynamics principle for perfect quantum memory in linear networks". In: *NJP* 16.7 (2014), p. 073032.

[37] Kuang Zhang et al. "Hamiltonian chaos in a coupled BEC–optomechanical-cavity system". In: *PRA* 81.1 (2010), p. 013802.

[38] Lennart Ljung. "System identification for the user". In: *Englewood Cliffs. Prentice-Hall, New Jersey* 9 (1987), pp. 1213–1225.

[39] Lennart Ljung. "Perspectives on system identification". In: *Annu. Rev. Control* 34.1 (2010), pp. 1–12.

[40] Rik Pintelon and Johan Schoukens. *System identification: a frequency domain approach*. John Wiley & Sons, 2012.

[41] Mădălin Guţă and Jukka Kiukas. "Equivalence classes and local asymptotic normality in system identification for quantum Markov chains". In: *Comm. Math. Phys* 335.3 (2015), pp. 1397–1428.

[42] Mădălin Guţă and Jukka Kiukas. "Information geometry and local asymptotic normality for multi-parameter estimation of quantum Markov dynamics". In: *arXiv: 1601.04355* (2016).

[43] Karl J Astrom and Bjorn Wittenmark. *Adaptive control*. Dover Publications, 2008.

[44] Keith Glover and Jan Willems. "Parametrizations of linear dynamical systems: canonical forms and identifiability". In: *IEEE Trans. Auto. Control* 19.6 (1974), pp. 640–646.

[45] Rudolf E Kalman. "Mathematical description of linear dynamical systems". In: *SIAM* 1.2 (1963), pp. 152–192.

[46] BL Ho and Rudolph E Kalman. "Effective construction of linear state-variable models from input/output functions". In: *at-Automatisierungstechnik* 14.1-12 (1966), pp. 545–548.

[47] Brian D O Anderson et al. "Equivalence of linear time-invariant dynamical systems". In: *J.Franklin Inst.* 281.5 (1966), pp. 371–378.

[48] Dante C Youla. "On the factorization of rational matrices". In: *IRE Trans. Inf. Theory* 7.3 (1961), pp. 172–189.

[49] Kemin Zhou, John Comstock Doyle, Keith Glover, et al. *Robust and optimal control*. Vol. 40. Prentice hall New Jersey, 1996.

[50] Michael C Davis. "Factoring the spectral matrix". In: *IEEE Trans. Auto. Control* 8.4 (1963), pp. 296–305.

[51] Kurt Jacobs and Daniel A Steck. "A straightforward introduction to continuous quantum measurement". In: *Contem. Phys.* 47.5 (2006), pp. 279–303.

[52] Carlton M Caves. "Quantum-mechanical noise in an interferometer". In: *PRD* 23.8 (1981), p. 1693.

[53] LIGO Scientific Collaboration et al. "A gravitational wave observatory operating beyond the quantum shot-noise limit". In: *Nature Phys.* 7.12 (2011), pp. 962–965.

[54] LIGO Scientific Collaboration et al. "Enhanced sensitivity of the LIGO gravitational wave detector by using squeezed states of light". In: *Nat. Photon* 7.8 (2013), pp. 613–619.

[55] Martin B Plenio et al. "Cavity-loss-induced generation of entangled atoms". In: *PRA* 59.3 (1999), p. 2468.

[56] Kai Stannigel, Peter Rabl, and Peter Zoller. "Driven-dissipative preparation of entangled states in cascaded quantum-optical networks". In: *NJP* 14.6 (2012), p. 063014.

[57] Naoki Yamamoto. "Pure Gaussian state generation via dissipation: a quantum stochastic differential equation approach". In: *Phil. Trans. R. Soc. A* 370.1979 (2012), pp. 5324–5337.

[58] Harold J Metcalf and Peter Van der Straten. *Laser cooling and trapping.* Springer Science & Business Media, 2012.

[59] Tao Yang and Leon O Chua. "Impulsive control and synchronization of nonlinear dynamical systems and application to secure communication". In: *Inter. J. Bifurc. Chaos* 7.03 (1997), pp. 645–664.

[60] Athanasios C Antoulas. *Approximation of large-scale dynamical systems.* SIAM, 2005.

[61] Martin Enqvist. "Linear models of nonlinear systems". In: (2005).

[62] David Hayden, Ye Yuan, and Jorge Gonçalves. "Network reconstruction from intrinsic noise: Minimum-phase systems". In: *2014 American Control Conference*. IEEE. 2014, pp. 4391–4396.

[63] Kalyanapuram R Parthasarathy. *An introduction to quantum stochastic calculus*. Springer Science & Business Media, 2012.

[64] Joshua Combes, Joseph Kerckhoff, and Mohan Sarovar. "The SLH framework for modeling quantum input-output networks". In: *arXiv:1611.00375* (2016).

[65] Robin L Hudson and Kalyanapuram R Parthasarathy. "Quantum Ito's formula and stochastic evolutions". In: *Comm. Math. Phys* 93.3 (1984), pp. 301–323.

[66] David Shale. "Linear symmetries of free boson fields". In: *Trans. AMS* 103.1 (1962), pp. 149–167.

[67] Christian Weedbrook et al. "Gaussian quantum information". In: *Revs. Mod. Phys.* 84.2 (2012), p. 621.

[68] Gerardo Adesso. "Entanglement of Gaussian states (PhD Thesis)". In: *arXiv: 0702069* (2007).

[69] John Williamson. "On the algebraic problem concerning the normal forms of linear dynamical systems". In: *Am. J. Math* 58.1 (1936), pp. 141–163.

[70] Michael M Wolf. "Not-so-normal mode decomposition". In: *PRL* 100.7 (2008), p. 070505.

[71] Alonso Botero and Benni Reznik. "Modewise entanglement of Gaussian states". In: *PRA* 67.5 (2003), p. 052311.

[72] Alexander I Lvovsky. "Squeezed light". In: *Photonics: Scientific Foundations Technology and Applications* 1 (2014).

[73] Aline I Maalouf and Ian R Petersen. "Coherent H^∞ Control for a Class of Annihilation Operator Linear Quantum Systems". In: *IEEE Trans. Autom. Control* 56.2 (2011), pp. 309–319.

[74] Ian R Petersen. "Cascade cavity realization for a class of complex transfer functions arising in coherent quantum feedback control". In: *Automatica* 47.8 (2011), pp. 1757–1763.

[75] Hendra I Nurdin. "On synthesis of linear quantum stochastic systems by pure cascading". In: *Decision and Control (CDC), 2010 49th IEEE Conference on*. IEEE. 2010, pp. 3002–3007.

[76] Christine A Muschik, Eugene S Polzik, and J Ignacio Cirac. "Dissipatively driven entanglement of two macroscopic atomic ensembles". In: *PRA* 83.5 (2011), p. 052312.

[77] Gao-xiang Li, Sha-sha Ke, and Zbigniew Ficek. "Generation of pure continuous-variable entangled cluster states of four separate atomic ensembles in a ring cavity". In: *PRA* 79.3 (2009), p. 033827.

[78] Mădălin Guţă and Naoki Yamamoto. "Systems identification for passive linear quantum systems: the transfer function approach". In: *52nd IEEE Conference on Decision and Control*. IEEE. 2013, pp. 1930–1937.

[79] Katarzyna Macieszczak et al. "Towards a theory of metastability in open quantum dynamics". In: *PRL* 116.24 (2016), p. 240404.

[80] Guofeng Zhang et al. "The Kalman Decomposition for Linear Quantum Systems". In: *arXiv: 1606.05719* (2016).

[81] Arne L Grimsmo. "Time-delayed quantum feedback control". In: *PRL* 115.6 (2015), p. 060402.

[82] Samuel L Braunstein and Carlton M Caves. "Statistical distance and the geometry of quantum states". In: *PRL* 72.22 (1994), p. 3439.

[83] Alexander S Holevo. *Probabilistic and statistical aspects of quantum theory*. Vol. 1. Springer Science & Business Media, 2011.

[84] Mădălin Guţă and Anna Jenčová. "Local asymptotic normality in quantum statistics". In: *Commun. Math. Phys* 276.2 (2007), pp. 341–379.

[85] Jay Gambetta and Howard Mark Wiseman. "State and dynamical parameter estimation for open quantum systems". In: *PRA* 64.4 (2001), p. 042105.

[86] John K Stockton et al. "Robust quantum parameter estimation: Coherent magnetometry with feedback". In: *PRA* 69.3 (2004), p. 032109.

[87] Daniel Burgarth and Koji Maruyama. "Indirect Hamiltonian identification through a small gateway". In: *NJP* 11.10 (2009), p. 103019.

[88] Daniel Burgarth, Koji Maruyama, and Franco Nori. "Indirect quantum tomography of quadratic Hamiltonians". In: *NJP* 13.1 (2011), p. 013019.

[89] Yuzuru Kato and Naoki Yamamoto. "Structure identification and state initialization of spin networks with limited access". In: *NJP* 16.2 (2014), p. 023024.

[90] Vittorio Giovannetti, Seth Lloyd, and Lorenzo Maccone. "Advances in quantum metrology". In: *Nat. Photon* 5.4 (2011), pp. 222–229.

[91] Itano Wayne M Wineland David J Bollinger John J and Daniel J Heinzen. "Optimal frequency measurements with maximally correlated states". In: *PRA* 54.6 (1996), R4649.

[92] Angel Rivas and Susana F Huelga. *Open Quantum Systems*. Springer, 2012.

[93] Krzysztof Majgier, Hans Maassen, and Karol Życzkowski. "Protected subspaces in quantum information". In: *Quantum Information Processing* 9.3 (2010), pp. 343–367.

[94] Naoki Yamamoto. "Coherent versus measurement feedback: Linear systems theory for quantum information". In: *PRX* 4.4 (2014), p. 041029.

[95] Alberto Frigerio. "Stationary states of quantum dynamical semigroups". In: *Commun. Math. Phys* 63.3 (1978), pp. 269–276.

[96] Ming-wen Xiao. "Theory of transformation for the diagonalization of quadratic Hamiltonians". In: *arXiv: 0908.0787* (2009).

[97] Zhang Jiang. "Quantum Fisher information for states in exponential form". In: *PRA* 89.3 (2014), p. 032128.

[98] Dénes Petz and Catalin Ghinea. "Introduction to quantum Fisher information". In: *Infin. Dimens. Anal. Qu* 1 (2011), pp. 261–281.

[99] Peter C Humphreys et al. "Quantum enhanced multiple phase estimation". In: *PRL* 111.7 (2013), p. 070403.

[100] Howard M Wiseman. "Adaptive phase measurements of optical modes: Going beyond the marginal q distribution". In: *PRL* 75.25 (1995), p. 4587.

[101] Ch Monroe et al. "A Schrodinger cat superposition state of an atom". In: *Science* 272.5265 (1996), p. 1131.

[102] Dominic W Berry et al. "How to perform the most accurate possible phase measurements". In: *PRA* 80.5 (2009), p. 052114.

[103] Itai Afek, Oron Ambar, and Yaron Silberberg. "High-NOON states by mixing quantum and classical light". In: *Science* 328.5980 (2010), pp. 879–881.

[104] Rafal Demkowicz-Dobrzański, Marcin Jarzyna, and Jan Kołodyński. "Chapter Four-Quantum Limits in Optical Interferometry". In: *Progress in Optics* 60 (2015), pp. 345–435.

[105] Holger F Hofmann and Takafumi Ono. "High-photon-number path entanglement in the interference of spontaneously down-converted photon pairs with coherent laser light". In: *PRA* 76.3 (2007), p. 031806.

[106] Matthew Pitkin et al. "Gravitational wave detection by interferometry (ground and space)". In: *Living Rev. Relat* 14.1 (2011), p. 5.

[107] Richard D Gill and Serge Massar. "State estimation for large ensembles". In: *PRA* 61.4 (2000), p. 042312.

[108] Alex Monras. "Phase space formalism for quantum estimation of Gaussian states". In: *arXiv: 1303.3682* (2013).

[109] Jonathan Roslund et al. "Wavelength-multiplexed quantum networks with ultrafast frequency combs". In: *Nat. Photon* 8.2 (2014), pp. 109–112.

[110] R Medeiros de Araújo et al. "Full characterization of a highly multimode entangled state embedded in an optical frequency comb using pulse shaping". In: *PRA* 89.5 (2014), p. 053828.

[111] Timothy Proctor, Paul Knott, and Jacob Dunningham. "Networked quantum sensing". In: *arXiv: 1702.04271* (2017).

[112] Jing Liu et al. "Quantum multiparameter metrology with generalized entangled coherent state". In: *J. Phys. A.* 49.11 (2016), p. 115302.

[113] Almut Beige et al. "Quantum computing using dissipation to remain in a decoherence-free subspace". In: *PRL* 85.8 (2000), p. 1762.

[114] David Kielpinski et al. "A decoherence-free quantum memory using trapped ions". In: *Science* 291.5506 (2001), pp. 1013–1015.

[115] Katarzyna Macieszczak et al. "Dynamical phase transitions as a resource for quantum enhanced metrology". In: *PRA* 93.2 (2016), p. 022103.

[116] U Dorner. "Quantum frequency estimation with trapped ions and atoms". In: *NJP* 14.4 (2012), p. 043011.

[117] John Gough and MR James. "Quantum feedback networks: Hamiltonian formulation". In: *Commun. Math. Phys* 287.3 (2009), pp. 1109–1132.

[118] Yu Pan, Daoyi Dong, and Ian R Petersen. "A direct method for analysis and synthesis of a decoherence-free mode in quantum linear systems". In: *American Control Conference (ACC), 2016*. IEEE. 2016, pp. 4760–4764.

[119] Freeman J Dyson. "Divergence of perturbation theory in quantum electrodynamics". In: *Phys. Rev* 85.4 (1952), p. 631.

[120] Alex Monras. "Optimal phase measurements with pure Gaussian states". In: *PRA* 73.3 (2006), p. 033821.

[121] Bruno Escher. "Quantum Sensitivity". In: *Quantum Information and Measurement*. Optical Society of America. 2013, W6–31.

[122] Guofeng Zhang. "Dynamical analysis of quantum linear systems driven by multi-channel multi-photon states". In: *arXiv: 1609.09191* (2016).

[123] Karl Gerd H Vollbrecht, Christine A Muschik, and J Ignacio Cirac. "Entanglement distillation by dissipation and continuous quantum repeaters". In: *PRL* 107.12 (2011), p. 120502.

[124] Shanon L Vuglar and Hadis Amini. "Design of coherent quantum observers for linear quantum systems". In: *NJP* 16.12 (2014), p. 125005.

[125] Ryan Hamerly and Hideo Mabuchi. "Advantages of coherent feedback for cooling quantum oscillators". In: *PRL* 109.17 (2012), p. 173602.

[126] Ian R Petersen. "Coherent-classical estimation for quantum linear systems". In: *Control Conference (AUCC), 2013 3rd Australian*. IEEE. 2013, pp. 491–496.